SAWSTOP

Owner's Manual

Model TSA-WTS

WorkTrack™ Sled



SAWSTOP.COM

TABLE OF CONTENTS

UNPACKING - WHAT'S IN THE BOX 3

INTRODUCTION 4

- EXPANDABILITY 4
- COMPATIBILITY 4

SAFETY 4

BRIDLE JOINT SETUP 5

TAPER CUT SETUP 9

PATTERN FENCE SETUP 12

LONG BEVEL CUT SETUP 15

SPLINE CUT SETUP 19

CLAMPING FOOT TIPS 22

- ASSEMBLY 22
- CLAMPING TECHNIQUE 23

MAKING ADJUSTMENTS 23

- ADJUSTING THE ANGLE 23
- ADJUSTING FOR PLAY 24
- FIXED VS MOVEABLE 24

TROUBLESHOOTING 26

LIMITED WARRANTY 27

ONLINE RESOURCES

- For patent information, visit www.SawStop.com/Patents.
- This document available in other languages on SawStop.com. Physical copies available upon request.
- Updates to this manual and additional related documentation such as exploded views and parts lists are available at SawStop.com.

Copyright SawStop, LLC - All Rights Reserved

UNPACKING - WHAT'S IN THE BOX

Included with your SawStop WorkTrack sled are the following items.

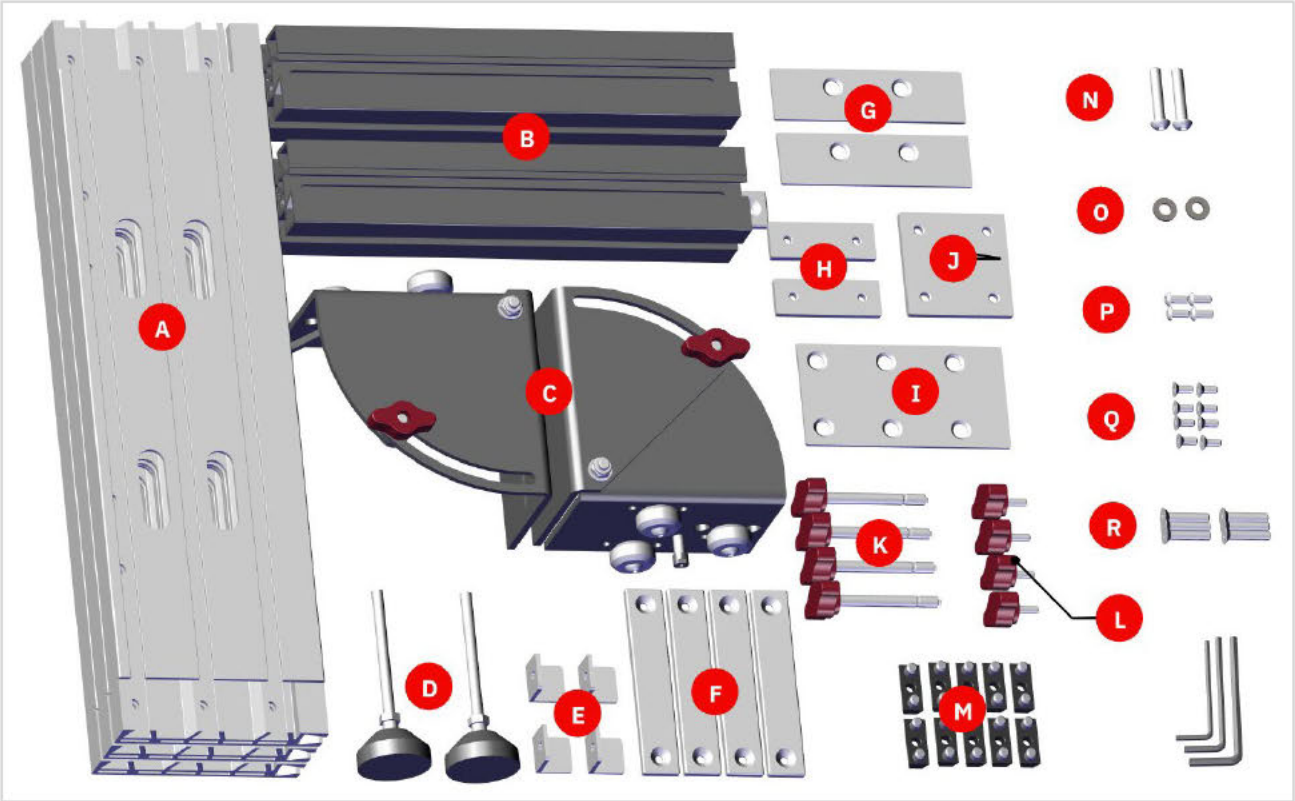

Unpack all parts and confirm that everything is accounted for.

Major Components

A. Base Plate (3)
B. Workpiece Support (2)
C. Cart (2)
D. Clamping Foot (2)
E. Glide Pad - L (4)
F. Glide Pad - Straight (4)
G. Front Connector Plate - Small (2)
H. Back Connector Plate (tapped) - Small (2)
I. Front Connector Plate - Large (1)
J. Back Connector Plate (tapped)- Large (1)

Fasteners

K. Workpiece Support Attachment Knob (4)
L. Cart Attachment Knob (4)
M. Dovetail Sliding Wedge (10)
N. Wedge Bolts - Long (2)
O. Wedge Bolt Washers (2)
P. Glide Pad Screws - L (4)
Q. Glide Pad Screw - Straight (8)
R. Connector Plate Screws (6)

Hex Wrench Set 2.5mm, 3mm, 4mm

NOTE:

The names and letter designations shown above for all components of the sled system are used throughout the instructions found in this manual.

INTRODUCTION

The setups shown in this manual are intended to introduce only a few common applications for your SawStop WorkTrack sled. These examples serve as a foundation but it doesn't end there. The modular design of the system allows you to adapt, modify, and expand each setup to meet the specific requirements of your projects.

When used in conjunction with clamps (not included), the applications of this tool are nearly endless.

EXPANDABILITY

Additional components are available for individual purchase to further increase the capability of your SawStop WorkTrack sled. This means you don't have to limit your imagination for precision cutting operations. For more information and to purchase components, visit our online store at SawStop.com.

COMPATIBILITY

The SawStop WorkTrack sled is compatible with table saws equipped with any T-Glide fence system.



Additionally, the tool is compatible with table saws equipped with an optional router table insert. Both table saw and router table applications of the WorkTrack sled are discussed in this manual.

SAFETY

- Be sure to wear hearing protection, eye protection, and follow all normal shop safety practices at all times.
- Always take care to keep your hands clear of saw blade. Use the blade guard whenever possible.
- After assembling the jig and installing it onto the WorkTrack rail, check the entire setup for any looseness, unexpected movement, vibration, or rattling. Tighten all T-knobs and fasteners until the assembly is fully stable and provides secure workpiece support.

  This practice will reduce the risk of kickback, improve cut quality, and prevent the jig from shifting or coming apart during cutting operations. Failure to inspect and correct for this can lead to poor workpiece control, damage to the tool, or injury to the operator.
- Secure all interfaces of adjustable, moveable parts of your WorkTrack sled while it is in use or while it is being transported to or from the saw.
- Take care not to drop the tool.
- Never let the saw blade or cutter in your machine come in contact with any component of your WorkTrack sled or clamps you've added to secure the workpiece. Verify that nothing but the material you intend to cut or mill is in the path of the blade before turning on the tool.
- Always make sure the workpiece is properly supported to minimize chatter and movement while cutting.
- It is recommended to lock the sled carts in place (see instructions on page 24) while configuring the sled and clamping your workpiece into place. This prevents unexpected movement until you are ready for cutting.

BRIDLE JOINT SETUP



The time-tested bridle joint consists of a tenon mated to an open mortise.

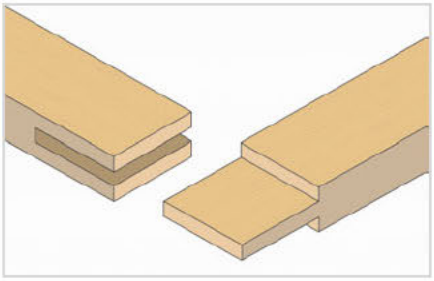

Configure your SawStop WorkTrack sled as seen below to make bridal joints and similar cut types.



NOTE:

Specifics for your setup may require deviations from what is shown depending on the relative dimensions of your workpiece and other factors unique to your project.

REQUIRED PARTS

The following is a list of parts and fasteners required to assemble the jig as seen above.

Major Components

- A. Base Plate (2)
- B. Workpiece Support (1)
- C. Cart (2)
- E. Glide Pad - L (2)
- G. Front Connector Plate - Small (2)
- H. Back Connector Plate (tapped) - Small (2)

Fasteners

- K. Workpiece Support Attachment Knob (2)
- L. Cart Attachment Knob (4)
- M. Dovetail Sliding Wedge (2)
- P. Glide Pad Screws - L (2)
- R. Connector Plate Screws (4)

Clamps (not included)

WARNING:

Clamping methods shown in this example scenario are strictly a suggested starting place. Exercise your best judgment for adding sufficient clamps to secure the workpiece to the jig. Note that the oval openings and dovetail-shaped channels in the Base Plates offer a variety of options for clamp placement and orientation to safely keep the workpiece secured during cutting operations.

Once you've gathered all of the parts listed above, assemble them as shown in the next section.

ASSEMBLY

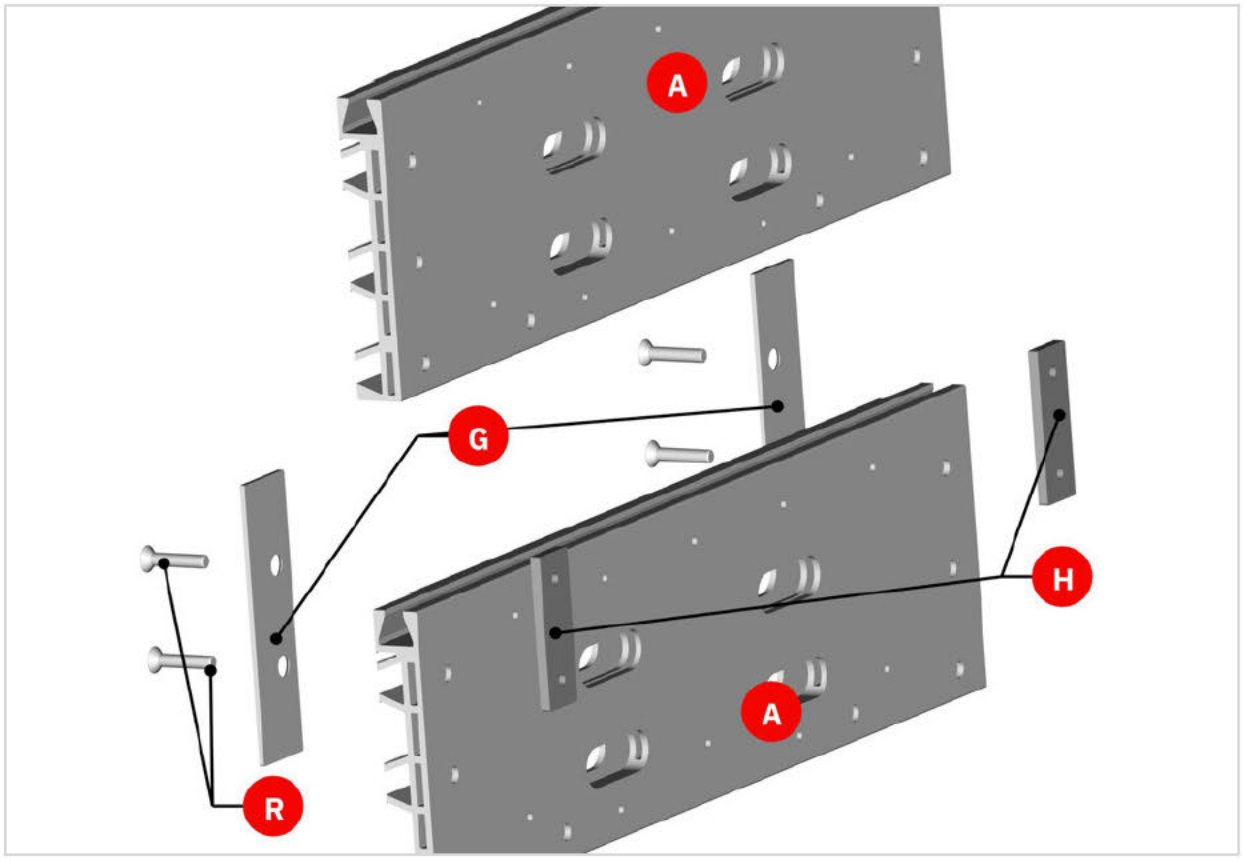

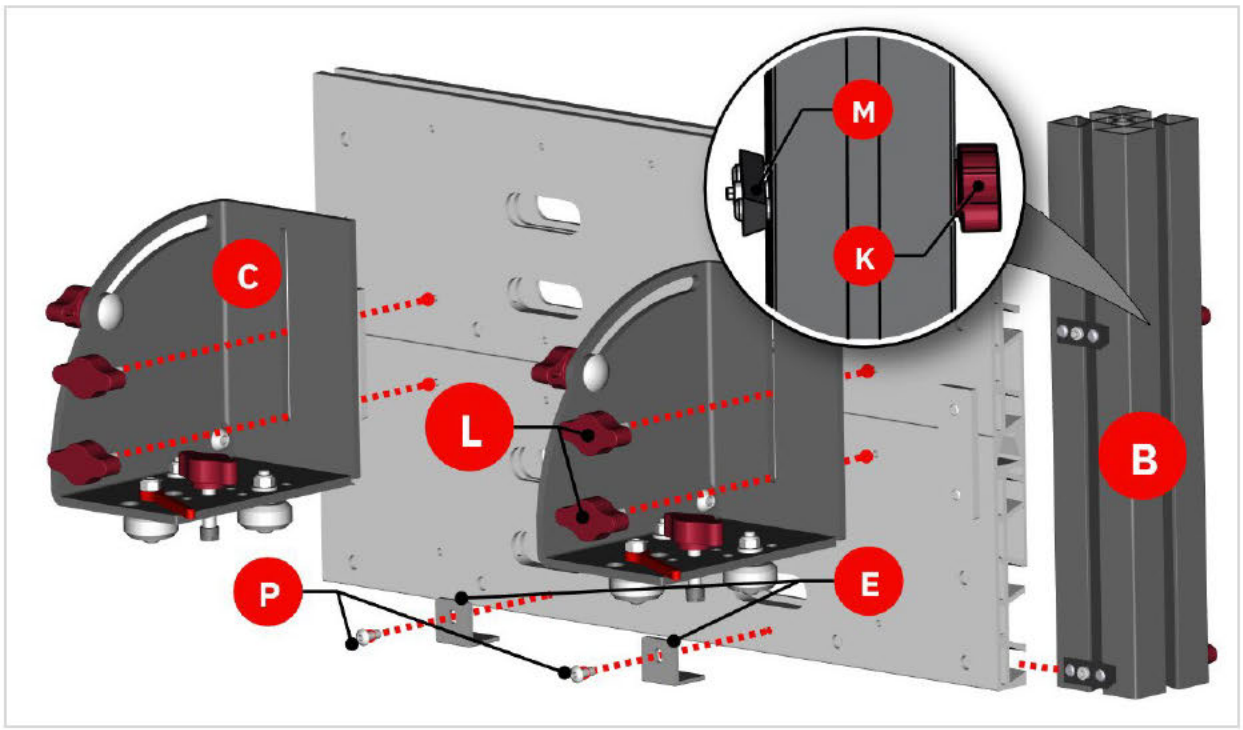

CUTTING INSTRUCTIONS

WARNING:

It is not possible to use the blade guard for this type of cut so exercise extreme care during cutting operations. Be sure that the riving knife is installed.

1. Set the saw blade tilt at 0°.
2. Set the assembled Base Plates to be perpendicular to the saw table. (See **ADJUSTING THE ANGLE** on page 23 for instructions.)
3. Set the blade to the desired height.
4. Determine whether you will cut tenons or mortises first. Secure the rip fence at the appropriate distace from the blade. This will vary based on the size of your workpiece and the preferred size of your tenons and mortises. Test your setup on a scrap workpiece that is identical in thickness to the stock you intend to use for your project.

IMPORTANT:

Before installing your workpiece into the jig, confirm that no part of the jig is in the path of the blade: Before starting the saw, move the jig across the saw table and past the blade. Maintain a minimum of 3mm of clearance between the jig and saw blade.

5. Install the workpiece into the jig as shown. Ensure that the workpiece is completely flush with the Workpiece Support. Secure the workpiece with appropriate clamping.



6. Start the saw then smoothly and steadily slide the jig along the WorkTrack rail to feed the workpiece into the blade. Cut to full depth without forcing or stopping midway.
7. Repeat this process for milling additional workpieces that require the rip fence in its current location.

NOTE:

The configuration of the jig and the location of the rip fence remains the same for cutting both sides of a tenon so batch cut all tenons. When cutting the mortises, the jig setup does not change. Only the rip fence location changes so batch cut all mortises once the fence has been re-positioned. Make a test on scrap stock after re-positioning the fence.

8. After completing the tenon cuts as described above using the SawStop WorkTrack sled, change the saw blade height as needed to complete the shoulder cuts. For an extra measure of precision, use a miter gauge with extended fence and an adjustable stop as shown.



VARIATIONS

This bridle joint example setup is identical to to the jig configuration required for castle joints, half-lap joints, and other tenon-like cuts.

Router Table Applications

This setup can be used with the Carts set at an angle (see instructions on page 23) for cutting "splined miter joints" slots. Use a straight-cutting bit or a dovetail bit if you're using dovetail-shaped splines.



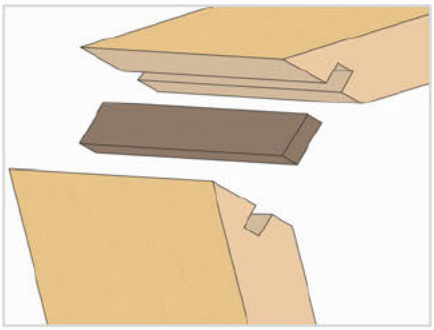

TAPER CUT SETUP



The WorkTrack sled makes tapered cuts simple and fast.

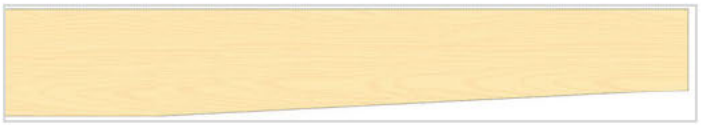

In this section, you will be instructed how to configure your SawStop WorkTrack sled for cutting tapered parts as shown below.

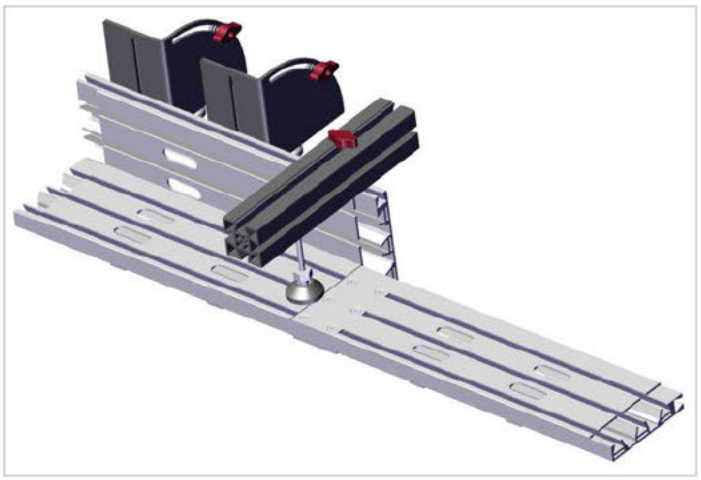

NOTE:

Specifics for your setup may require deviations from what is shown depending on the relative dimensions of your workpiece and other factors unique to your project.

REQUIRED PARTS

The following is a list of parts and fasteners required to assemble the jig as seen above.

Major Components

- A. Base Plate (3)
- B. Workpiece Support (1)
- C. Cart (2)
- D. Clamping Foot (1)
- F. Glide Pad - Straight (4)
- H. Back Connector Plate (tapped) - Small (1)
- I. Front Connector Plate - Large (1)
- J. Back Connector Plate (tapped) - Large (1)

Fasteners

- K. Workpiece Support Attachment Knob (1)
- L. Cart Attachment Knob (2)
- M. Dovetail Wedge (4)
- N. Wedge Bolts - Long (2)
- O. Wedge Bolt Washers (2)
- Q. Glide Pad Screw - Straight (8)
- R. Connector Plate Screws (6)

Clamps (not included)

WARNING:

Clamping methods shown in this example scenario are strictly a suggested starting place. Exercise your best judgment for adding sufficient clamps to secure the workpiece to the jig. Note that the oval openings and dovetail-shaped channels in the Base Plates offer a variety of options for clamp placement and orientation to safely keep the workpiece secured during cutting operations.

Once you've gathered the parts listed above, assemble them as shown in the next section.

ASSEMBLY

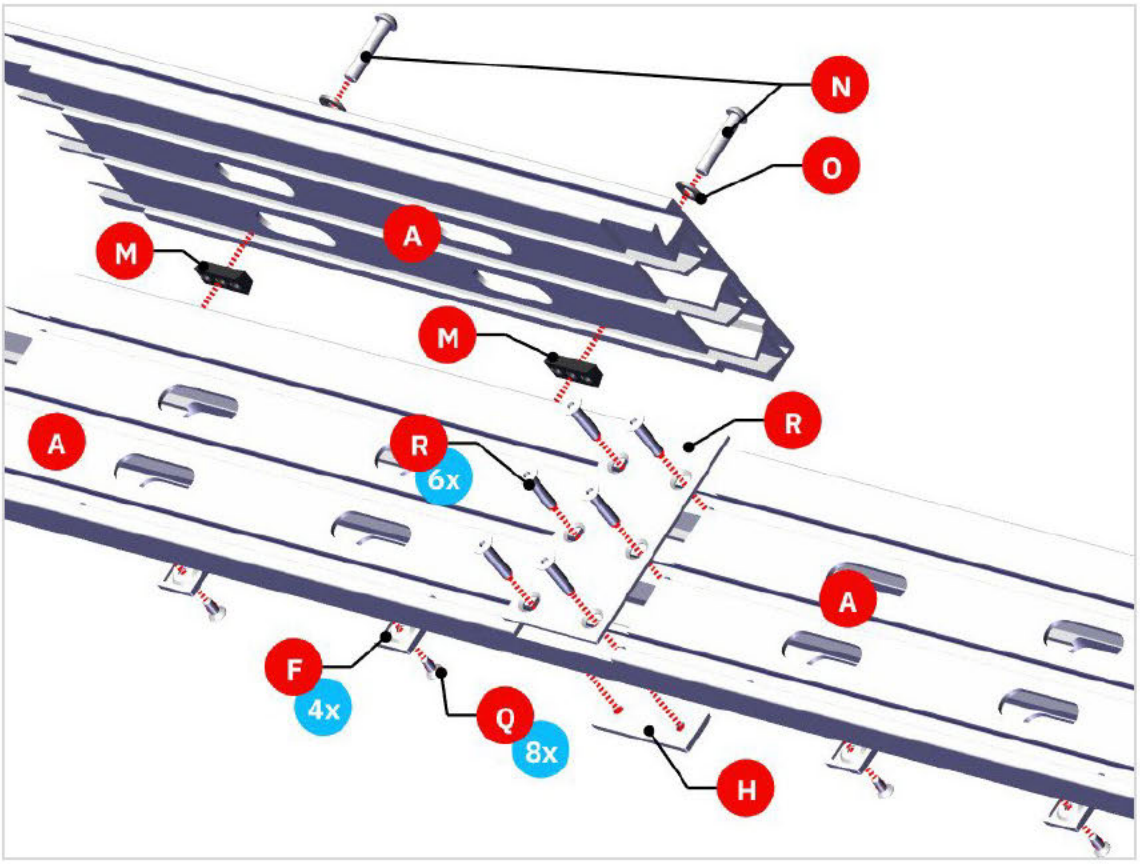

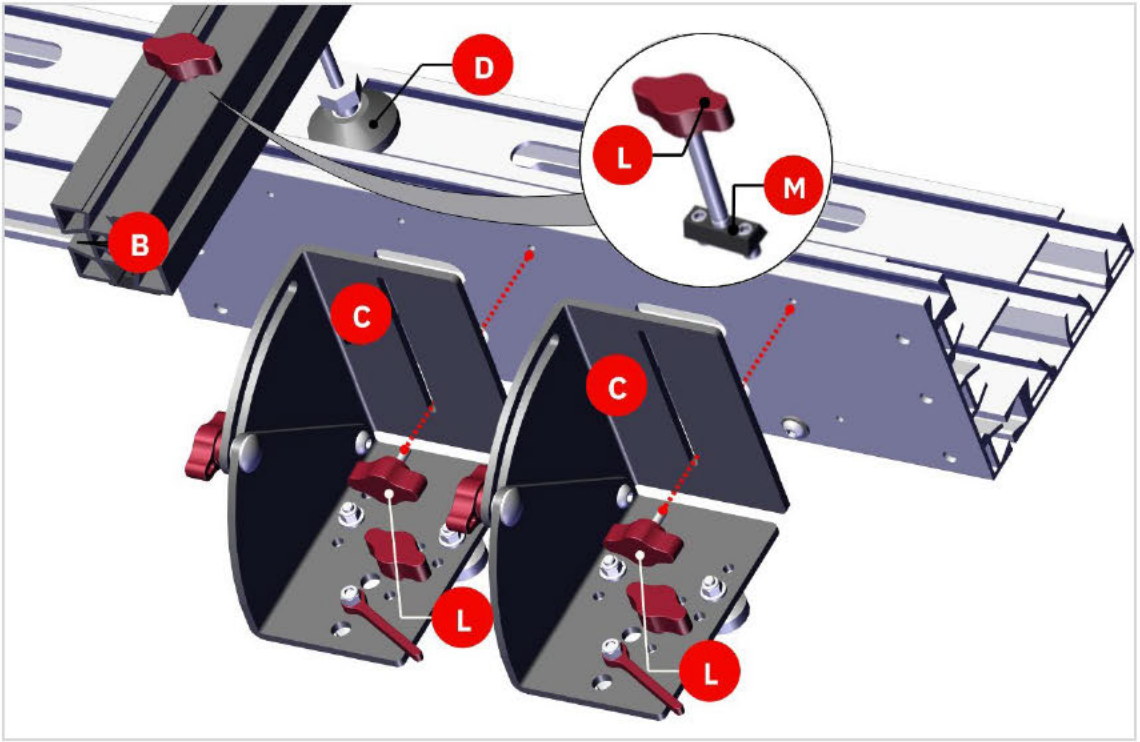

Before the completed assembly is mated with the WorkTrack rail, perform the following steps to ensure the jig runs square and true.

1. Loosen both Cart Attachment Knob (L) then slide the Carts into the track.
2. Loosen the T-knobs for the tilt adjustment on both Carts (C). (See ADJUSTING THE ANGLE on page 22.)
3. Confirm that glide pads (F) are resting flush with the table surface, check this with a square between the table and side of the horizontal Base Plate (A).
4. Tighten both Cart Attachment Knob (L) and T-Knobs for the tilt adjustment on both Carts (C).

CUTTING INSTRUCTIONS

1. Set the saw blade tilt for 0°.
2. Set the blade height to slightly above the thickness of the workpiece to be cut.

> **NOTE:**
> The blade height should factor in an additional 1" (25mm) to account for the horizontally oriented Base Plate on which the workpiece will rest.

3. Orient the workpiece on the jig at the appropriate angle to achieve the desired cut line.



> **IMPORTANT:**
> Before installing your workpiece into the jig, confirm that no part of the jig is in the path of the blade: Before starting the saw, move the jig across the saw table and past the blade. Maintain a minimum of 3mm of clearance between the jig and saw blade.

4. Secure the workpiece in place using two track clamps when possible; however, longer workpieces may not allow for the placement of two track clamps. In this instance, use one track clamp in combination with the clamping foot. For more information **CLAMPING FOOT TIPS** on page 22.
5. Make the cut: Guide the jig assembly down the length of the rail until the work piece has been completely cut.

VARIATIONS

This setup can also be employed for squaring or jointing a workpiece with a rough or uneven edge, or for cutting an angled groove using an inline router table. Both scenarios require securing the workpiece to the jig in the orientation that will achieve the desired cut line.



PATTERN FENCE SETUP

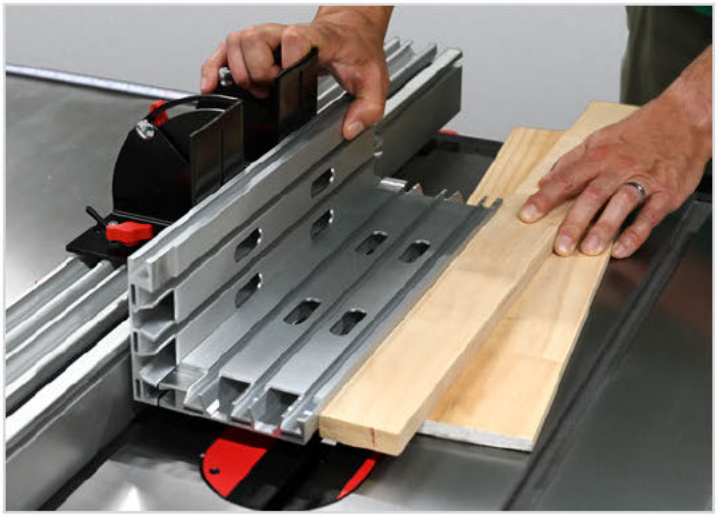

In this section, you will be instructed how to configure your SawStop WorkTrack sled as a Pattern Fence (also known as an L Fence.

A pattern fence can be used can be used to square up an uneven edge or cut a taper on a workpiece that is longer than the rolling capacity of the WorkTrack rail. This setup can also be used to copy a pattern/template (polygon) affixed to the workpiece. You may find additional application ideas by reviewing the many L-fence demonstration videos available online.

For this application, configure the jig as shown below.

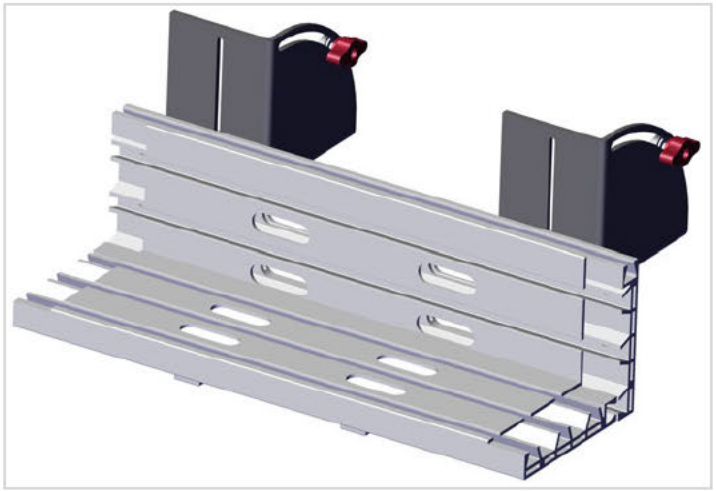

NOTE:

Specifics for your setup may require deviations from what is shown depending on the relative dimensions of your workpiece and other factors unique to your project.

WARNING:

Because the pattern will come into contact with the tip of the saw blade, it must be made of wood or other non-conductive material when using the SawStop WorkTrack sled. This is especially important with SawStop table saws as conductive materials will trigger the SawStop safety system.

REQUIRED PARTS

The following is a list of parts and fasteners required to assemble the jig as seen above.

Major Components

- A. Base Plate (2)
- C. Cart (2)
- F. Glide Pad - Straight (2)

Fasteners

- L. Cart Attachment Knob (2)
- M. Dovetail Wedge (2)
- N. Wedge Bolts - Long (2)
- O. Wedge Bolt Washers (2)
- Q. Glide Pad Screw - Straight (4)

Once you've gathered all of the parts listed above, assemble them as shown in the next section.

ASSEMBLY

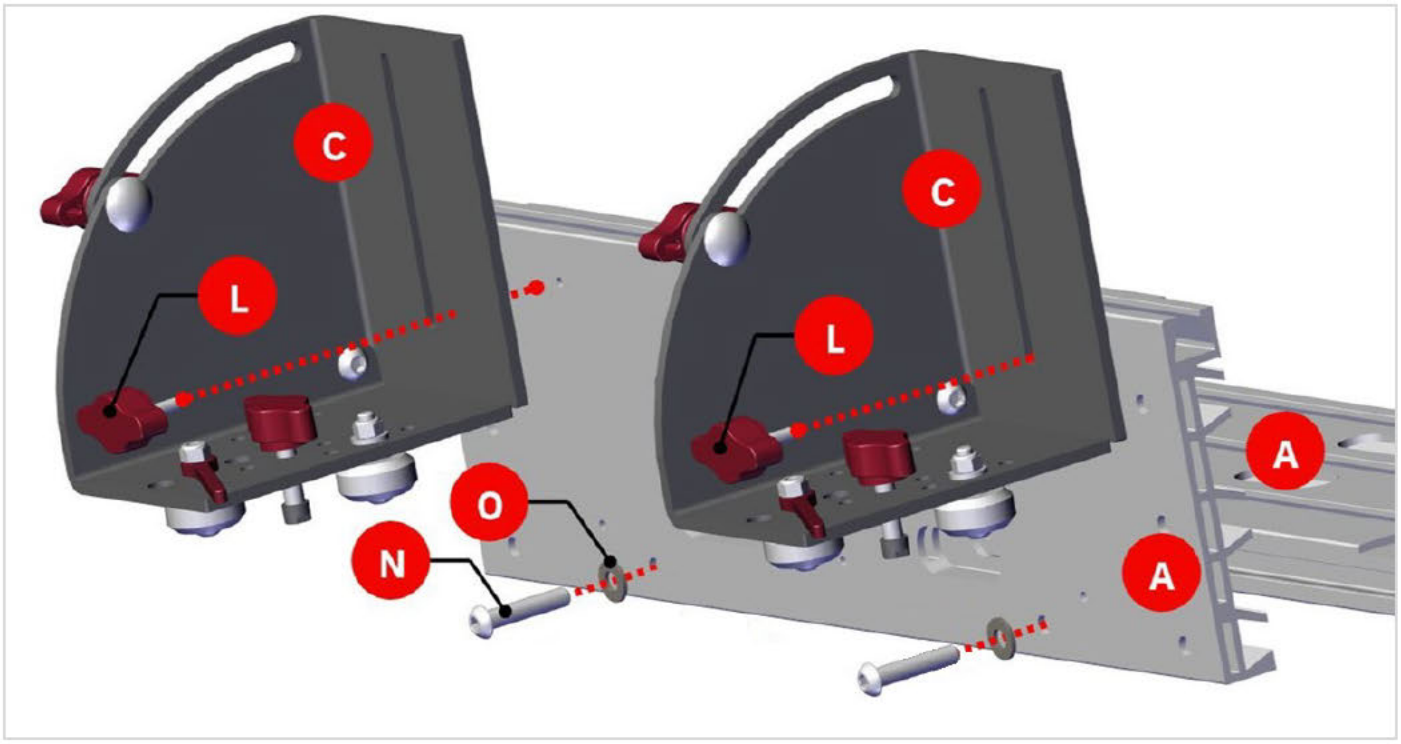

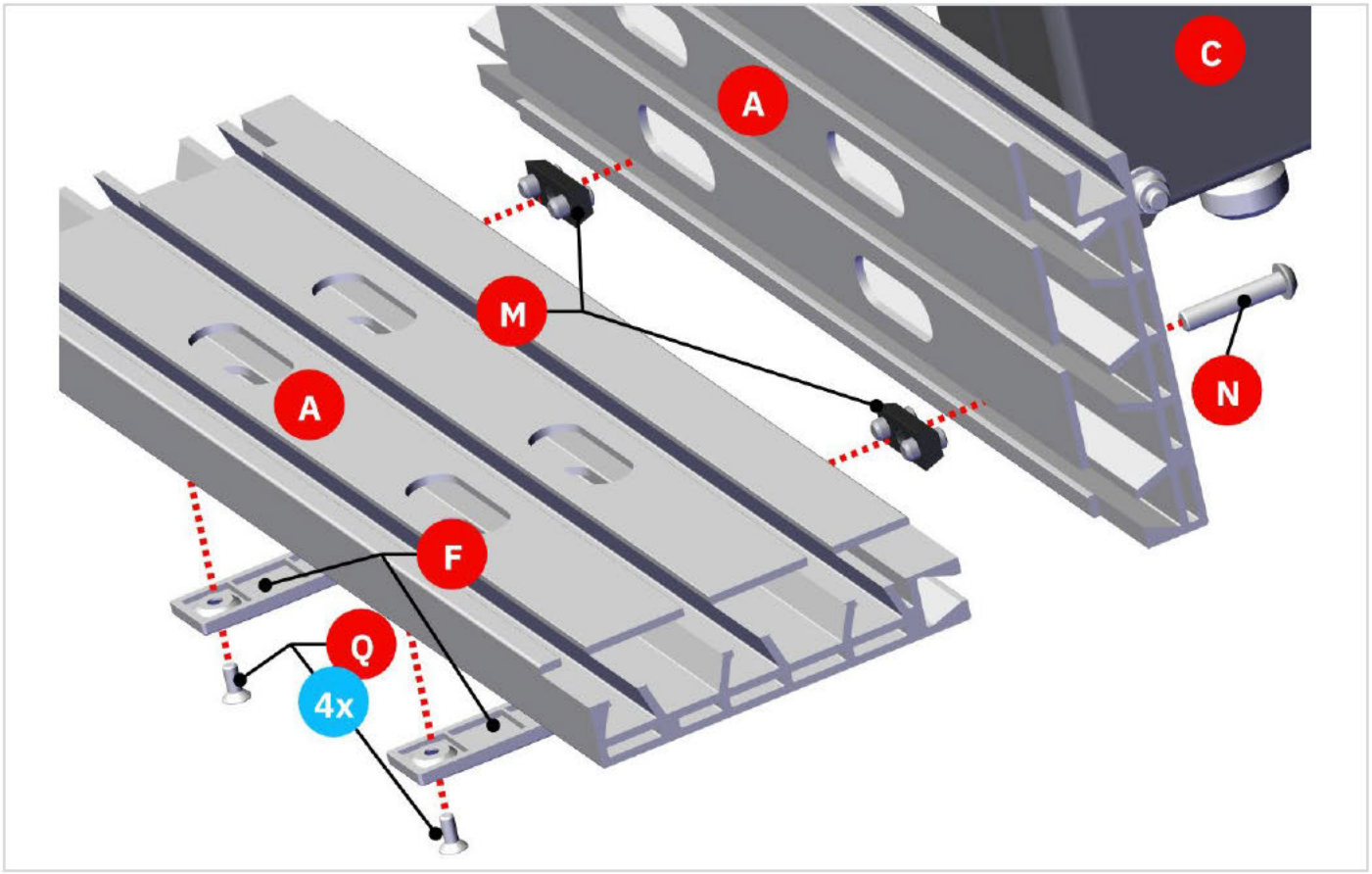

CUTTING INSTRUCTIONS

WARNING:

It is not possible to use the blade guard for this type of cut so exercise extreme care during cutting operations. Be sure that the riving knife is installed.

1. Set the saw blade tilt for 90°.
2. Set the blade height to slightly above the thickness of the workpiece to be cut.
3. Set the height of the horizontal Base Plate: Loosen the two T-Knobs that secure the vertically positioned Base Plates to the Carts. Adjust the jig such that the horizontal Base Plate is set about 3mm above the blade height, then re-tighten the T Knobs.

   WARNING:

   Ensure that no portion of the SawStop WorkTrack sled is in contact with the saw blade.

4. Make the jig stationary: Position the jig where the center horizontal Base Plate is aligned with the arbor of the saw. Fix the jig in place by turning the T-knob located on horizontal portion of each Cart in a clockwise direction. Secure both front and rear carts. Do not over-tighten.
5. Set the rip fence: Position the rip fence so that the un-supported end of horizontal Base Plate (A) is precisely aligned with the left side of the blade kerf as shown.



6. Using brad nails or double-sided tape, attach the pattern (piece to be copied) to the workpiece to be cut.
7. Make the cut by guiding the side of the pattern/template along the un-supported end of the horizontal Base Plate (similar to guiding the workpiece against a standard rip fence). Depending on the complexity of the pattern, multiple passes will be required for each side of the pattern to complete the copy.



IMPORTANT:

The width of the offcuts from each pass may not exceed the width of the horizontal Base Plate.

VARIATIONS

This setup can also function as a guard for non-through cuts such as dado or rabbet cutting.

LONG BEVEL CUT SETUP



Long bevels, tongue and groove cuts, raised panel work, and similar cut types can be achieved using this setup.

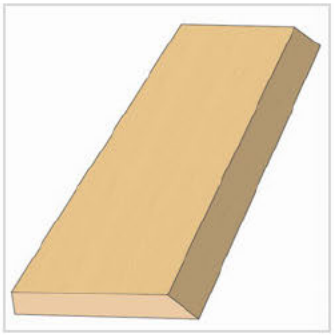

To perform long bevel cuts, set up your SawStop WorkTrack sled as shown below.

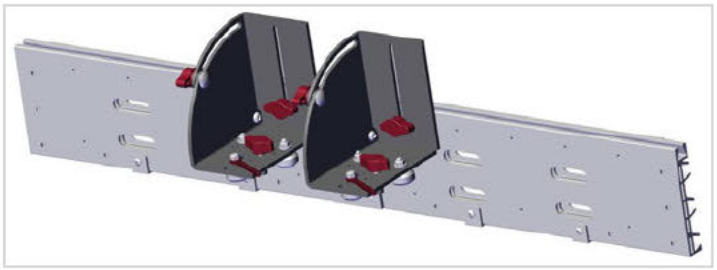

NOTE:

Specifics for your setup may require deviations from what is shown depending on the relative dimensions of your workpiece and other factors unique to your project.

REQUIRED PARTS

The following is a list of parts and fasteners required to assemble the jig as seen above.

Major Components

- A. Base Plate (2)
- C. Cart (2)
- E. Glide Pad - L (4)
- H. Back Connector Plate (tapped) - Small (1)
- I. Front Connector Plate - Large (1)
- J. Back Connector Plate (tapped) - Large (1)

Fasteners

- L. Cart Attachment Knob (2)
- P. Glide Pad Screws - L (4)
- R. Connector Plate Screws (6)

Clamps (not included)

WARNING:

Clamping methods shown in this example scenario are strictly a suggested starting place. Exercise your best judgment for adding sufficient clamps to secure the workpiece to the jig. Note that the oval openings and dovetail-shaped channels in the Base Plates offer a variety of options for clamp placement and orientation to safely keep the workpiece secured during cutting operations.

Once you've gathered all of the parts listed above, assemble them as shown in the next section.

ASSEMBLY

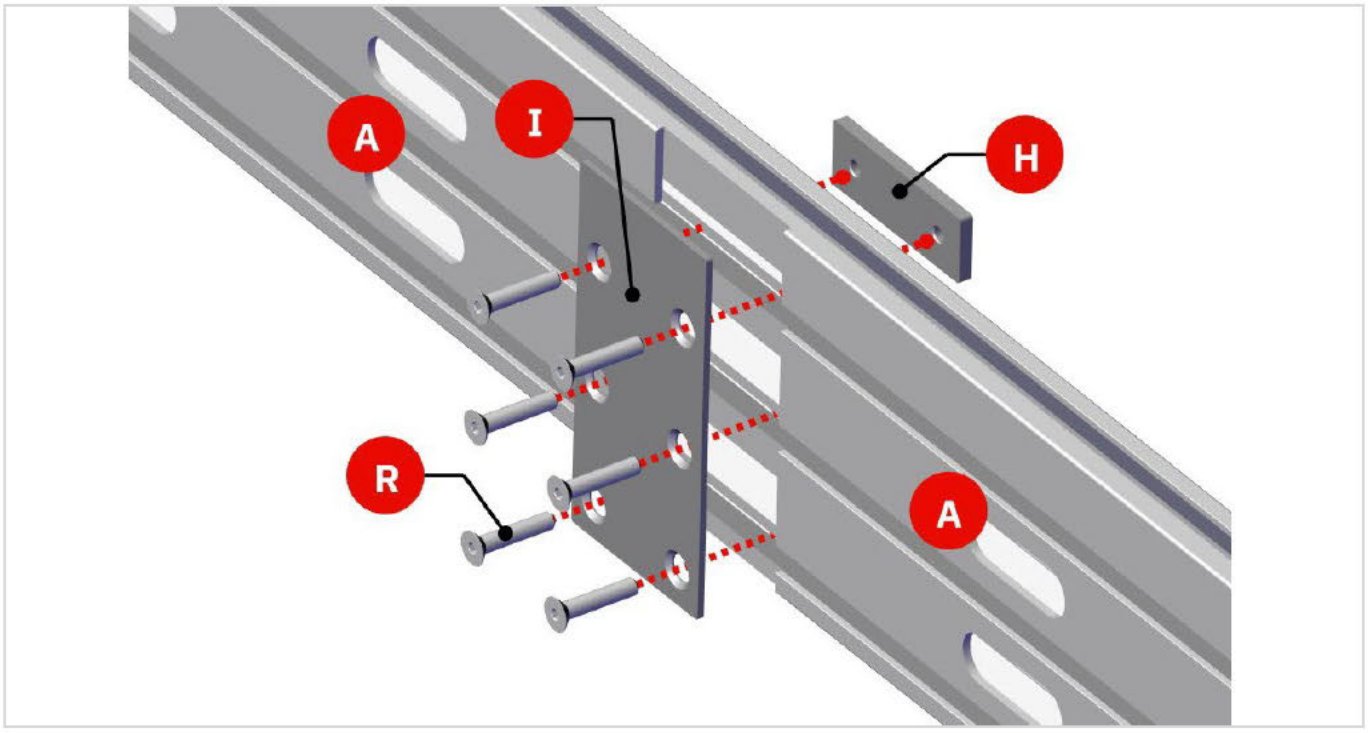

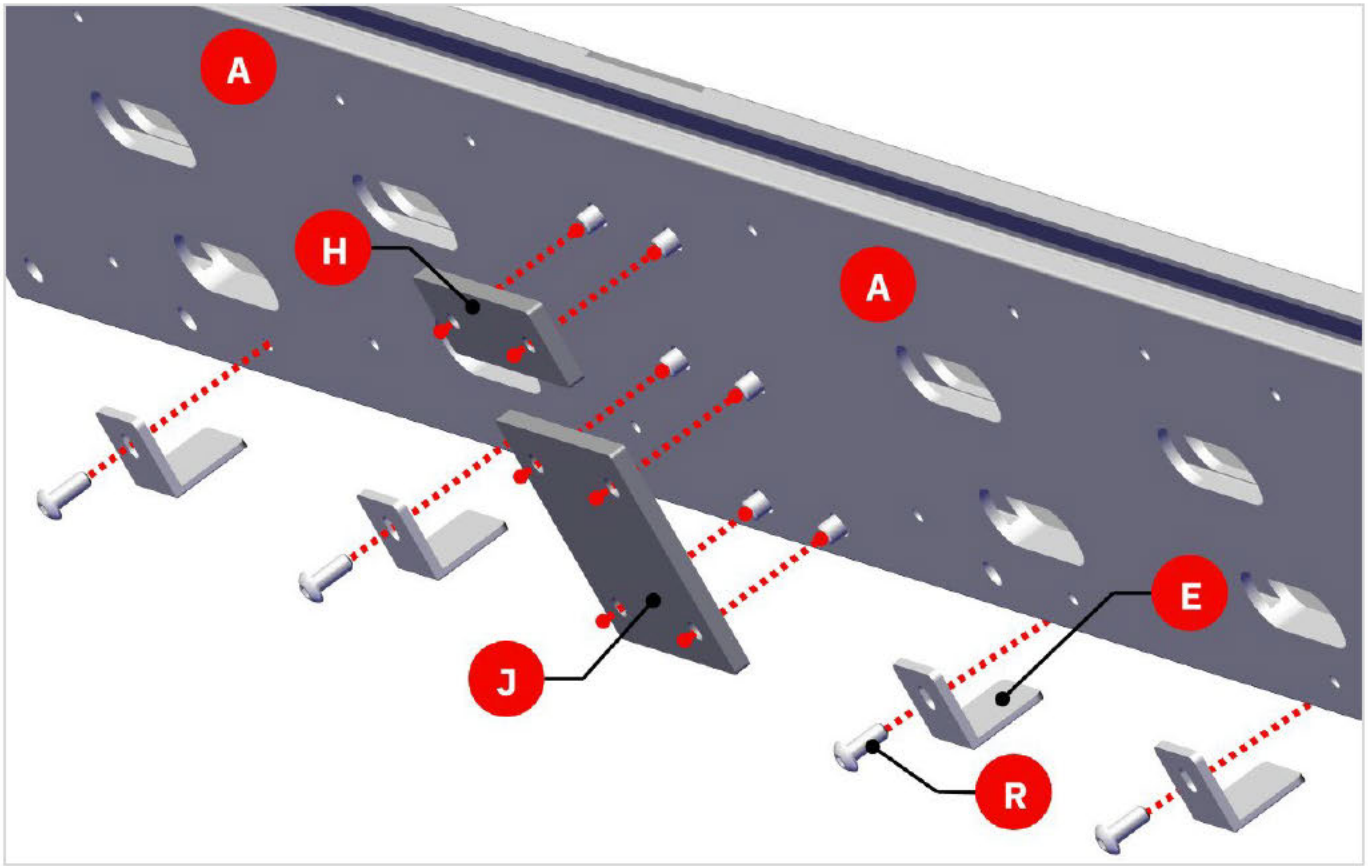

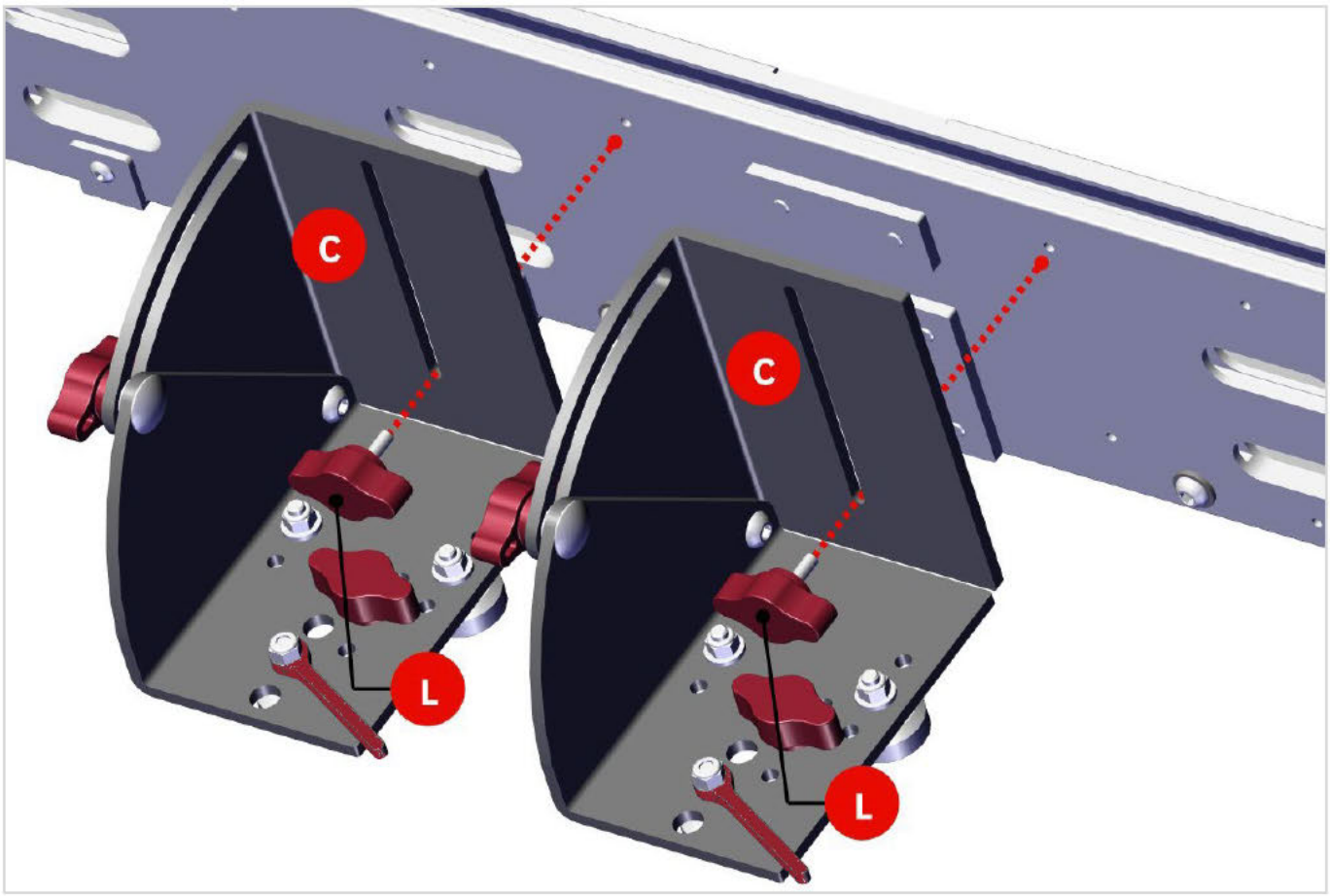

NOTE:

The Carts (C) can be attached to any of the threaded holes in the Base Plates (A) to enable longer or shorter cuts. Carts spaced further apart will provide greater stability.

CUTTING INSTRUCTIONS

WARNING:

It is not possible to use the blade guard for this type of cut so exercise extreme care during cutting operations. Be sure that the riving knife is installed.

1. Set the assembled Base Plates to be perpendicular to the saw table. (See **ADJUSTING THE ANGLE** on page 23 for instructions.)
2. Adjust the saw blade tilt and/or the angle adjustment on the Carts (C) to achieve the desired bevel angle. Tilting both the sled and the blade allows you create angled cuts between 45° and 90° in one pass. (Tilting the face is also useful for angled router cuts, where the bit can't be tilted.)
3. Set the blade to the correct height necessary to complete the cut.

IMPORTANT:

Before installing your workpiece into the jig, confirm that no part of the jig is in the path of the blade: Before starting the saw, move the jig across the saw table and past the blade. Maintain a minimum of 3mm of clearance between the jig and saw blade.

4. Install the workpiece into the jig as shown. Ensure that the workpiece is secure with appropriate clamping.



5. Start the saw and guide the the jig and workpiece across the track and past the blade until the cut is completed.



VARIATIONS

This long bevel cutting setup can also be applied to cutting simple raised panels, or tongue and groove cutting operations. A dado stack (where available) with the blade tilt set at 90° is needed for tongue and groove applications whereas a single blade set for some other tilt angle applies to raised panel (and similar) cutting applications (as shown above).

SPLINE CUT SETUP



Adding splines to mitered corners of woodworking projects increases joint strength, creates visual interest when using contrasting wood and also improves alignment and assembly in some situations.

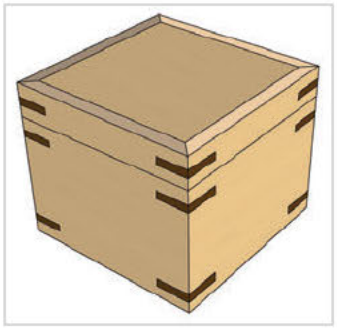

Configure your SawStop WorkTrack sled as seen below for spline cutting operations.

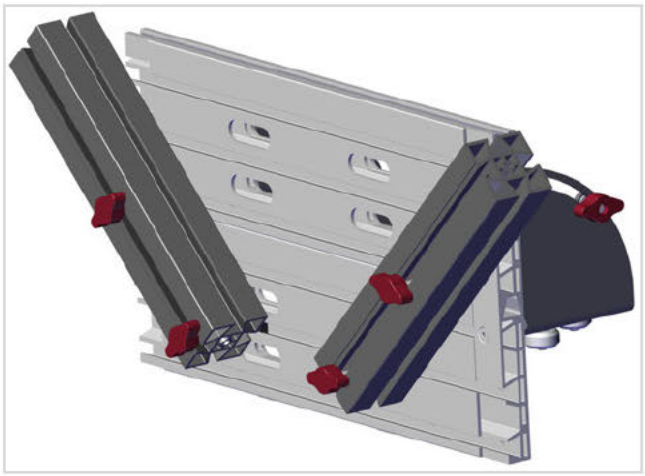

NOTE:

Specifics for your setup may require deviations from what is shown depending on the relative dimensions of your workpiece and other factors unique to your project.

REQUIRED PARTS

The following is a list of parts and fasteners required to assemble the jig as seen above.

Major Components

- A. Base Plate (2)
- B. Workpiece Support (2)
- C. Cart (2)
- E. Glide Pad - L (2)
- G. Front Connector Plate - Small (2)
- H. Back Connector Plate (tapped) - Small (2)

Fasteners

- K. Workpiece Support Attachment Knob (4)
- L. Cart Attachment Knob (4)
- M. Dovetail Sliding Wedge (4)
- P. Glide Pad Screws - L (2)
- R. Connector Plate Screws (4)

Clamps (not included)

WARNING:

Clamping methods shown in this example scenario are strictly a suggested starting place. Exercise your best judgment for adding sufficient clamps to secure the workpiece to the jig. Note that the oval openings and dovetail-shaped channels in the Base Plates offer a variety of options for clamp placement and orientation to safely keep the workpiece secured during cutting operations.

Once you've gathered all of the parts listed above, assemble them as shown in the next section.

ASSEMBLY

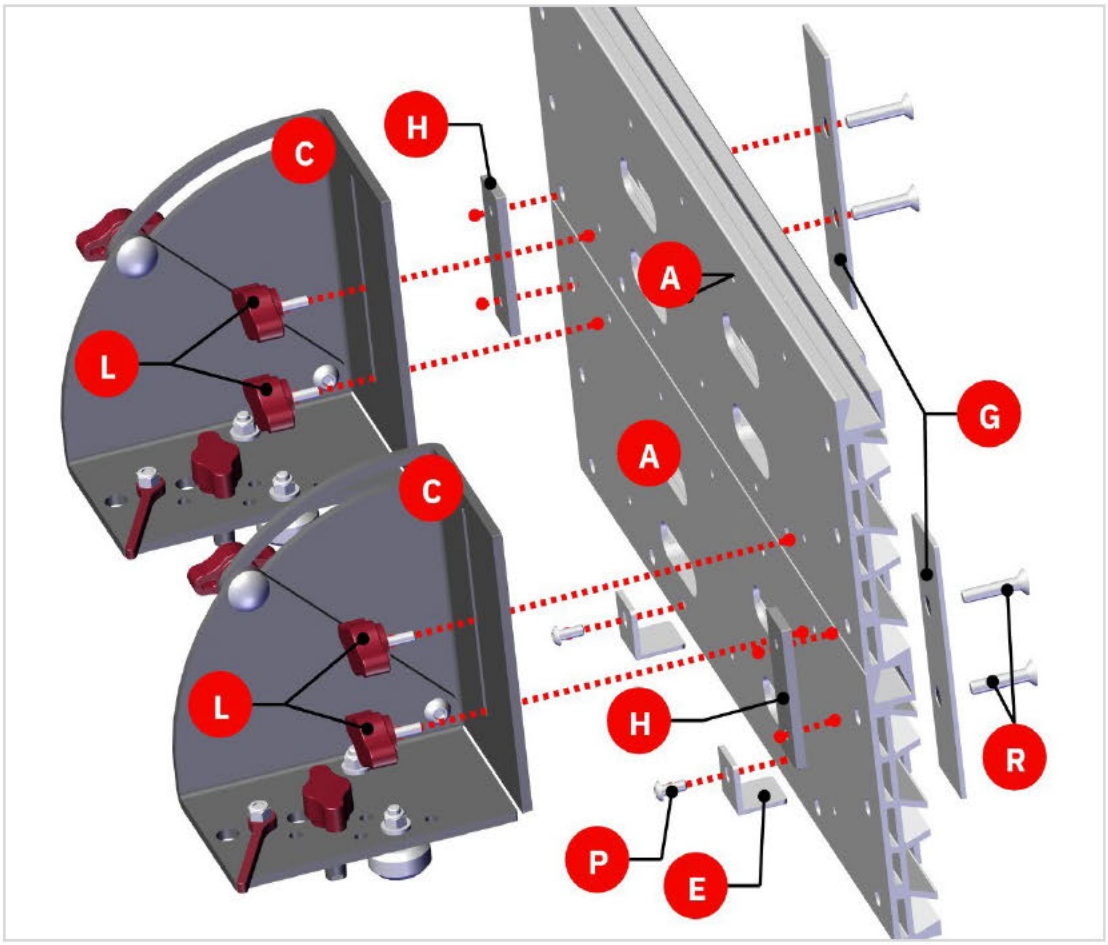

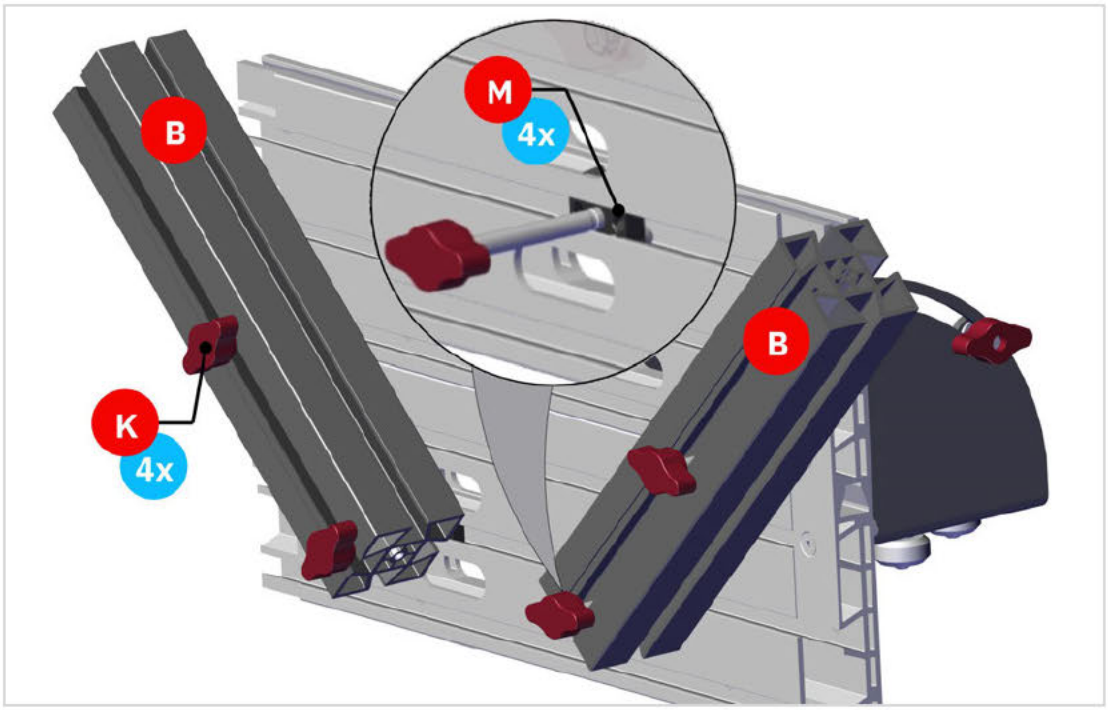

CUTTING INSTRUCTIONS

WARNING:

It is not possible to use the blade guard for this type of cut so exercise extreme care during cutting operations. Be sure that the riving knife is installed.

1. Set the saw blade tilt at the desired angle. Depending on your project, it is not required that splines are placed at 90°.
2. Determine the depth of cut needed for the splines and set the blade height accordingly.
3. Set the tilt adjustment on the Carts to 90°. (See **ADJUSTING THE ANGLE** on page 23 for instructions.)
4. Set the position of the rip fence according to the desired placement of the splines in the workpiece.
5. **IMPORTANT:**

   Before installing your workpiece into the jig, confirm that no part of the jig is in the path of the blade: Before starting the saw, move the jig across the saw table and past the blade. Maintain a minimum of 3mm of clearance between the jig and saw blade.
6. Install the workpiece into the jig as shown. Ensure that the workpiece is secure with appropriate clamping.



7. Start the saw then smoothly and steadily slide the jig along the WorkTrack rail to feed the workpiece past the blade. Complete the cut without forcing or stopping midway.

VARIATIONS

While the example above shows a square project with 90° mitered sides, this setup can be modified for adding splines to other polygons. Simply adjust the angle of the Workpiece Supports (B) to match the angle of the miter angles associated with your project.

Router Table Applications

This setup can be used with a dovetail router bit if you're making dovetail-shaped splines.

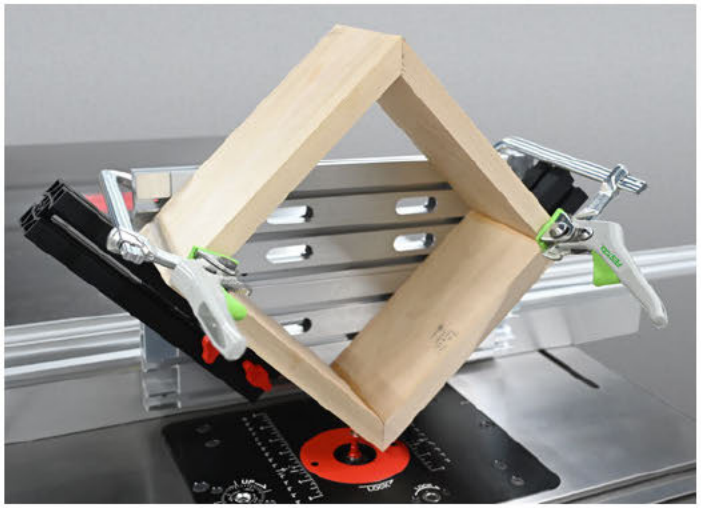



CLAMPING FOOT TIPS

These instructions describe how to get the most from employing a clamping foot as seen in the Taper Cut jig example found on page 9. You may also find other applications for a clamping foot in the jigs you design with the WorkTrack sled.

ASSEMBLY

1. Locate one Dovetail Wedge (M) at the end of the Workpiece Support (B). Using a 3mm hex wrench, tighten the wedge setscrew (shown in blue) closest to the end of the workpiece support to fix it in place. (The second set screw can be removed if desired.)

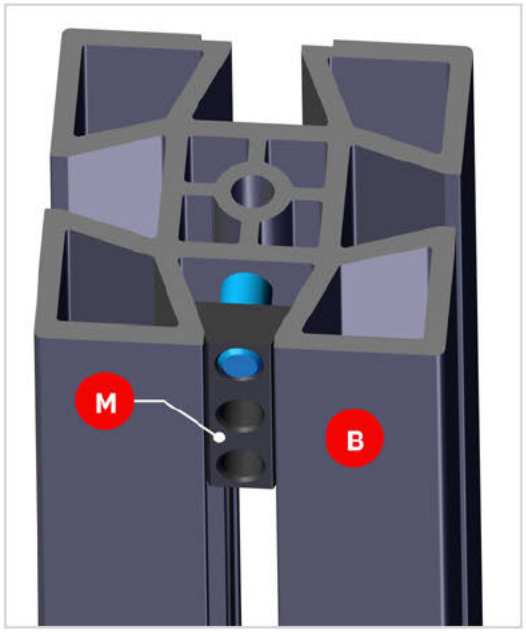

2. Thread the Clamping Foot (D) into the center hole of this wedge. For now, thread it all the way until it stops turning.

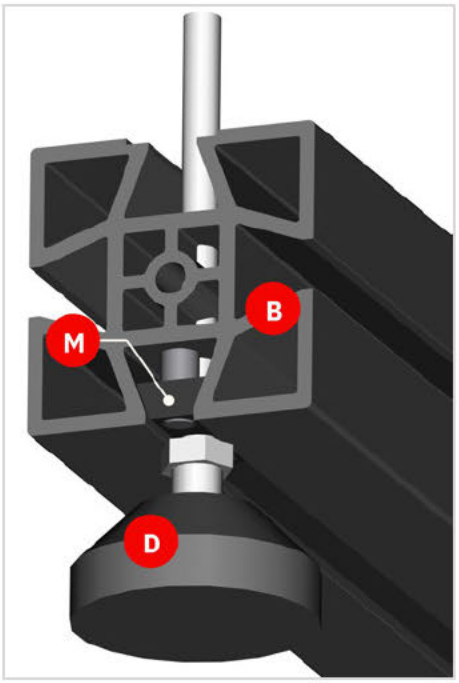

3. Prepare another Dovetail Wedge (shown in blue) by completely removing both set screws. Use this wedge with Workpiece Support Attachment Knob (L) to attach the Workpiece Support (B) to the slot on the top edge of the vertically oriented Base Plate (A).

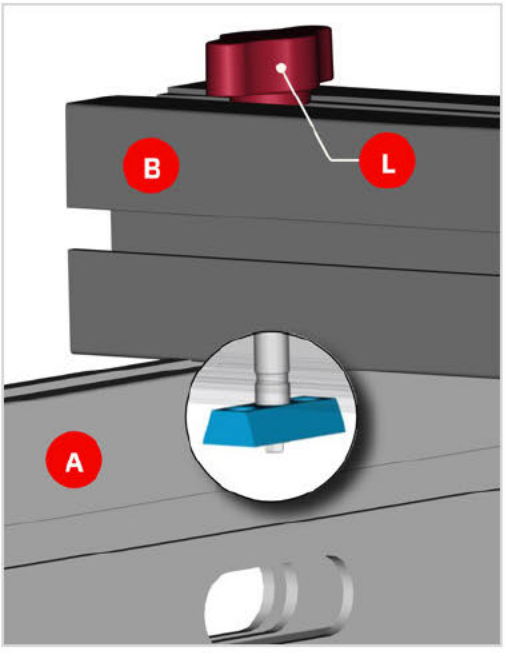

CLAMPING TECHNIQUE

1. Position the clamping foot end of the Workpiece Support (B) so that it is over the horizontally oriented Base Plate (A) on which the workpiece rests. (This applies to setups that resemble the taper cut jig shown on page 9.)
2. Tighten the Workpiece Support Attachment Knob (L).

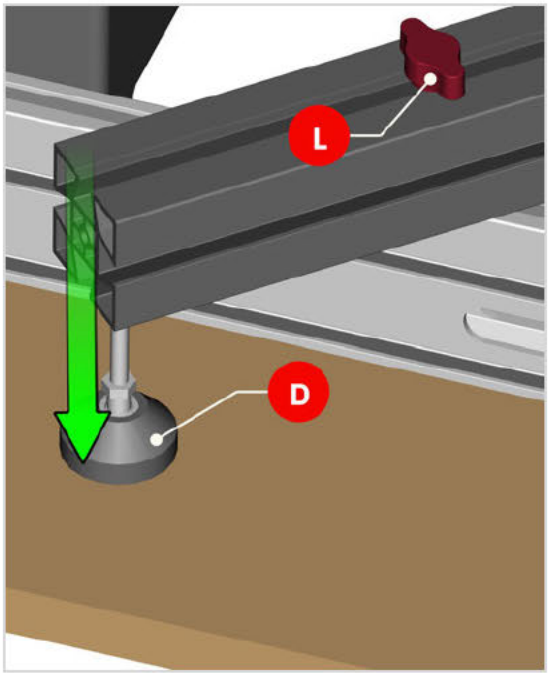

3. Rotate the Clamping Foot (D) shaft to lower the Clamping Foot until it makes contact with the workpiece and a little resistance is felt.
4. Increase the clamping force a little more using an 17mm wrench on the nut just above the clamping foot. Tighten just enough to prevent the workpiece from moving unexpectedly during cutting but do not over-tighten after achieving this.

WARNING:

Depending on the design of your jig and the size of your chosen workpiece, the clamping foot alone is likely not sufficient to secure the workpiece. Add more clamps if needed (such as F-clamps and rail clamps) to ensure the workpiece does not shift during cutting.

MAKING ADJUSTMENTS

In addition to being highly configurable, your SawStop WorkTrack sled has some adjustment features. Each of these easy to use features is discussed in this section.

ADJUSTING THE ANGLE

Once you have configured your SawStop WorkTrack sled for a particular cutting operation, it may be desirable to tilt the entire jig to a particular angle. Each Cart is designed to pivot from 0° through 45°.

WARNING:

Take care to avoid the finger pinch hazard while adjusting the angle of the Carts.

1. Loosen the knobs indicated below (there is one on each Cart).

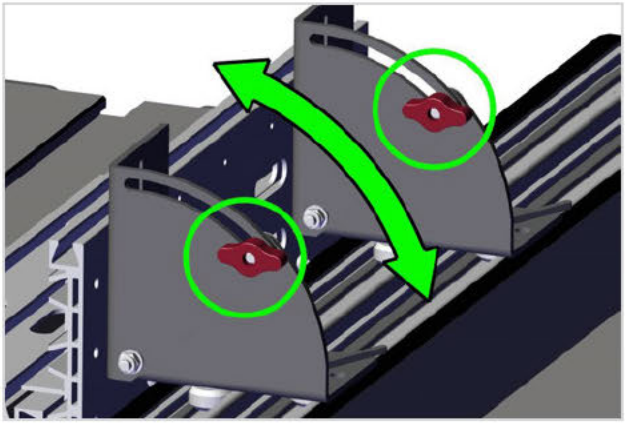

2. Tilt the assembly to the desired angle. Consider employing a square or other suitable standard for establishing a precision angle.
3. Re-tighten the knobs you loosened in step 1.

NOTE:

For best accuracy results, set the desired angle after your workpiece is clamped to the fixture.

ADJUSTING FOR PLAY

If the assembly does not glide smoothly or has too much play as it moves down the track, this can be tuned to your preference using the adjustment lever shown in blue.

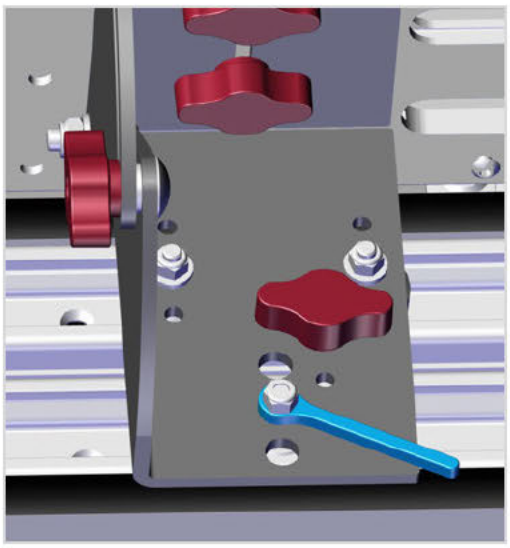

- Push the adjustment lever to the left (clockwise) if the fit is too loose.
- Push the adjustment lever to the right (counter-clockwise) if the fit is too tight and the jig does not glide smoothly.

Perform this adjustment for both front and rear Carts. Do not over-tighten.

FIXED VS MOVEABLE

For certain cutting operations, the jig will need to be fixed in a particular location as opposed to moving down the track. Set this feature using the adjustment shown in blue.

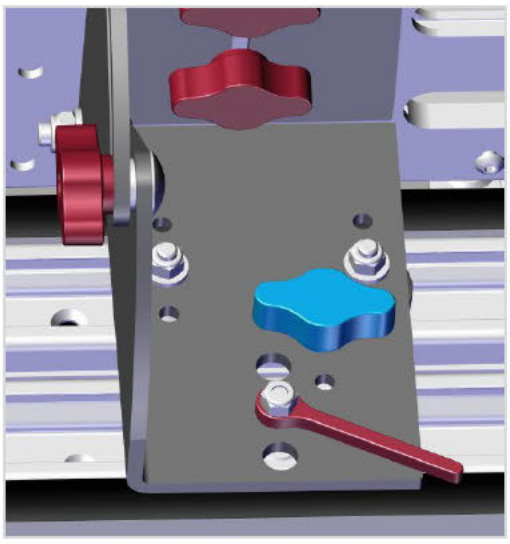

- Rotate the adjustment clockwise until light resistance if felt to fix the jig in a desired location.
- Rotate the adjustment counter-clockwise to allow the jig to move freely along the rail.

Perform this adjustment for both front and rear Carts.

ADJUSTING SLED CLEARANCE

A gross adjustment to the positioning of the Carts is made possible with the un-used holes shown in the illustration below. These additional holes provide alternative locations for the rollers on on the underside. This affects how much of the cart overhangs the side of the rip fence.

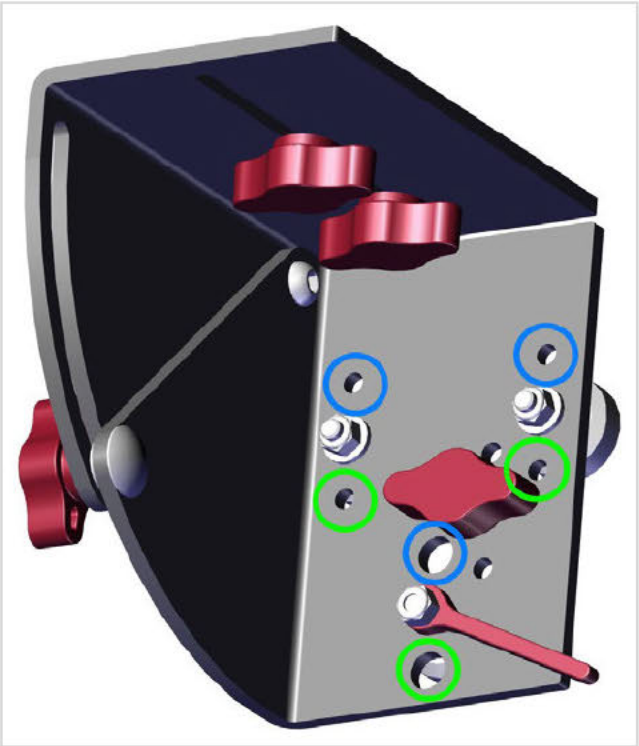

From the factory, the rollers are installed in the middle position. Depending on your fence and personal preferences, you may choose to customize this. For fully extended positioning, move the rollers to the holes circled in green. For fully retracted positioning, move the rollers to the holes circled in blue.

TROUBLESHOOTING

PROBLEM	POSSIBLE CAUSE(S)	SOLUTION
Jig does not move smoothly on the rail	The adjustment for cart fitment to the rail is set too tight.	Adjust the tension. See **ADJUSTING FOR PLAY** on page 1 for instructions.
	The T-knob on one or both carts for setting the jig in a fixed position is not sufficiently retracted.	Retract the adjustment for setting the Cart(s) in a fixed location. See **FIXED VS MOVEABLE** on page 1 for instructions.
	The glide pad is worn out.	**Replace worn glide pad.**
The jig has too much play (side to side) movement in the rail.	The adjustment for cart fitment to the rail is set too tight.	Adjust the tension. See **ADJUSTING FOR PLAY** on page 1 for instructions.

LIMITED WARRANTY

SawStop warrants to the original retail purchaser of a new WorkTrack sled from an authorized SawStop distributor that the WorkTrack sled will be free from defects in material and workmanship for ONE YEAR from the date of purchase (with product registration) and that the electric motor supplied with the saw will be free from defects in material and workmanship for FIVE YEARS from the date of purchase. SawStop warrants to the original retail purchaser of a refurbished product from an authorized SawStop distributor that the WorkTrack sled will be free from defects in material and workmanship for SIX MONTHS from the date of purchase (with product registration).

This warranty does not apply to defects arising from misuse, abuse, negligence, accidents, normal wear-and-tear, unauthorized repair or alteration, or lack of maintenance. This warranty is void if the WorkTrack sled or any portion of the WorkTrack sled is modified without the prior written permission of SawStop, LLC, or if the WorkTrack sled is located or has been used outside of the country where the authorized SawStop distributor from whom the product was purchased resides.

Please contact SawStop to take advantage of this warranty. If SawStop determines the WorkTrack sled is faulty in material or workmanship, and not due to misuse, abuse, negligence, accidents, normal wear-and-tear, unauthorized repair or alteration, or lack of maintenance, then SawStop will, at its expense and upon proof of purchase, send replacement parts to the original retail purchaser necessary to cure the defect.

SawStop disclaims any and all other express or implied warranties, including merchantability and fitness for a particular purpose. SawStop shall not be liable for death, injuries to persons or property, or incidental, consequential, contingent or special damages arising from the use of this WorkTrack sled.

This limited warranty gives you specific legal rights. You may have other rights which, in the United States, vary from state to state.

SAWSTOP

USA/Canada

SawStop
11555 SW Myslony Street
Tualatin, OR 97062 USA

SawStop.com/Support
TechnicalSupport@SawStop.com
503-582-9934

Parts available for purchase at
SawStop.com

Australia

Carbatec.com.au/contact
customercare@carbatec.com.au

85-009101-00
Rev A - 11092026