SAWSTOP

Owner's Manual

Model TSA-WTG

WorkTrack™ Guides

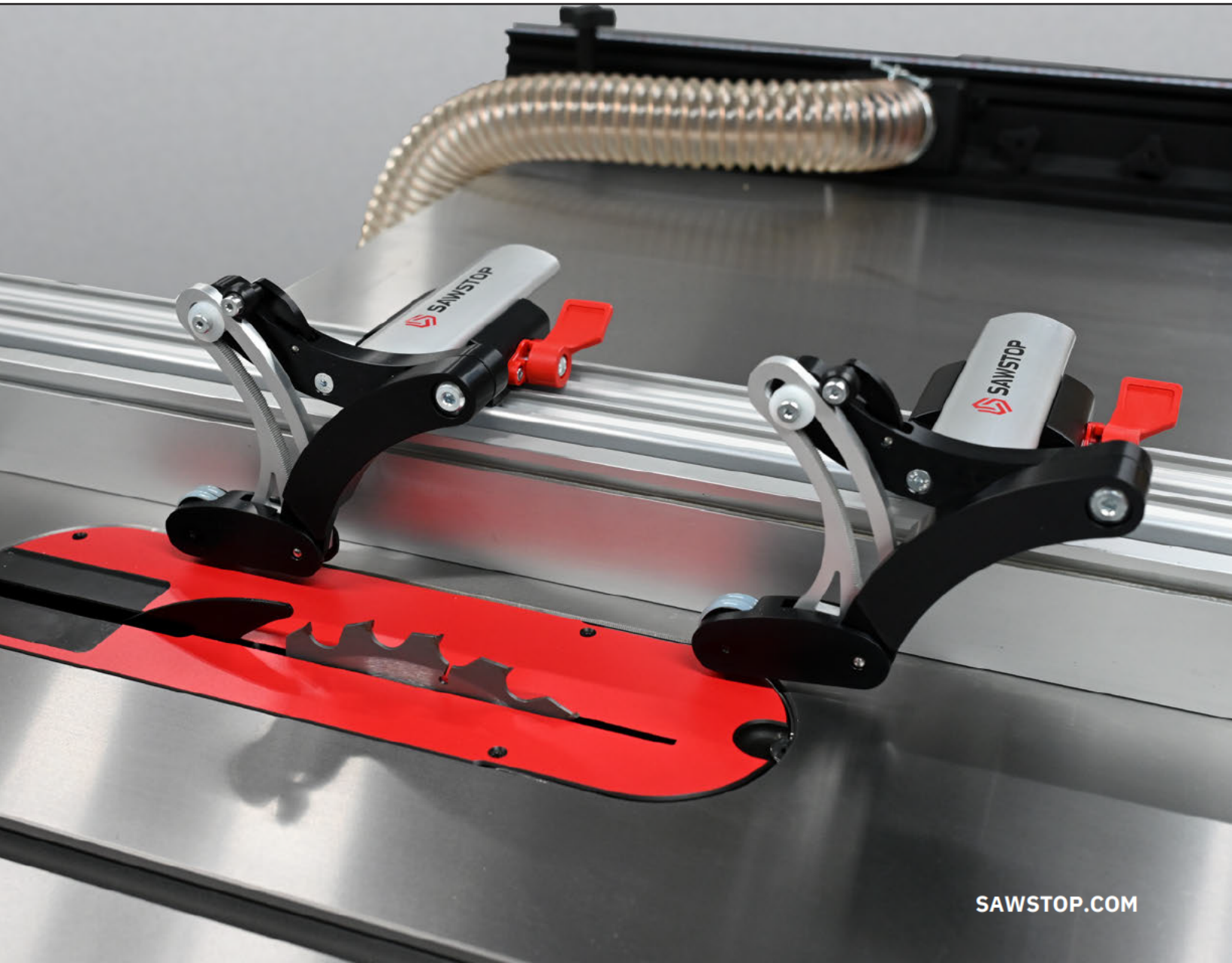

SAWSTOP.COM

TABLE OF CONTENTS

UNPACKING - WHAT'S IN THE BOX 3
COMPATIBILITY 3
SAFETY 4
ASSEMBLY 4
INSTALLATION 5
OPERATION 7
- FUNCTION 7
- REMOVING THE WORKPIECE EARLY 7
- RETRACTING THE GUIDES 8

ADJUSTING MINIMUM HEIGHT FROM SAW TABLE 8
ADJUSTING LOCKING LEVER CLAMPING FORCE 9
TROUBLESHOOTING 10
LIMITED WARRANTY 11

ONLINE RESOURCES

- For patent information, visit www.SawStop.com/Patents.
- This document available in other languages on SawStop.com. Physical copies available upon request.
- Updates to this manual and additional related documentation such as exploded views and parts lists are available at SawStop.com.

Copyright SawStop, LLC - All Rights Reserved

UNPACKING - WHAT'S IN THE BOX

Included with your WorkTrack guides are the following items.

A. Guide Assembly (2)

B. Extension Arm (2)

C. Carriage (2)

D. Bolts (4)

3mm Hex Wrench

Unpack all contents and confirm that everything is accounted for.

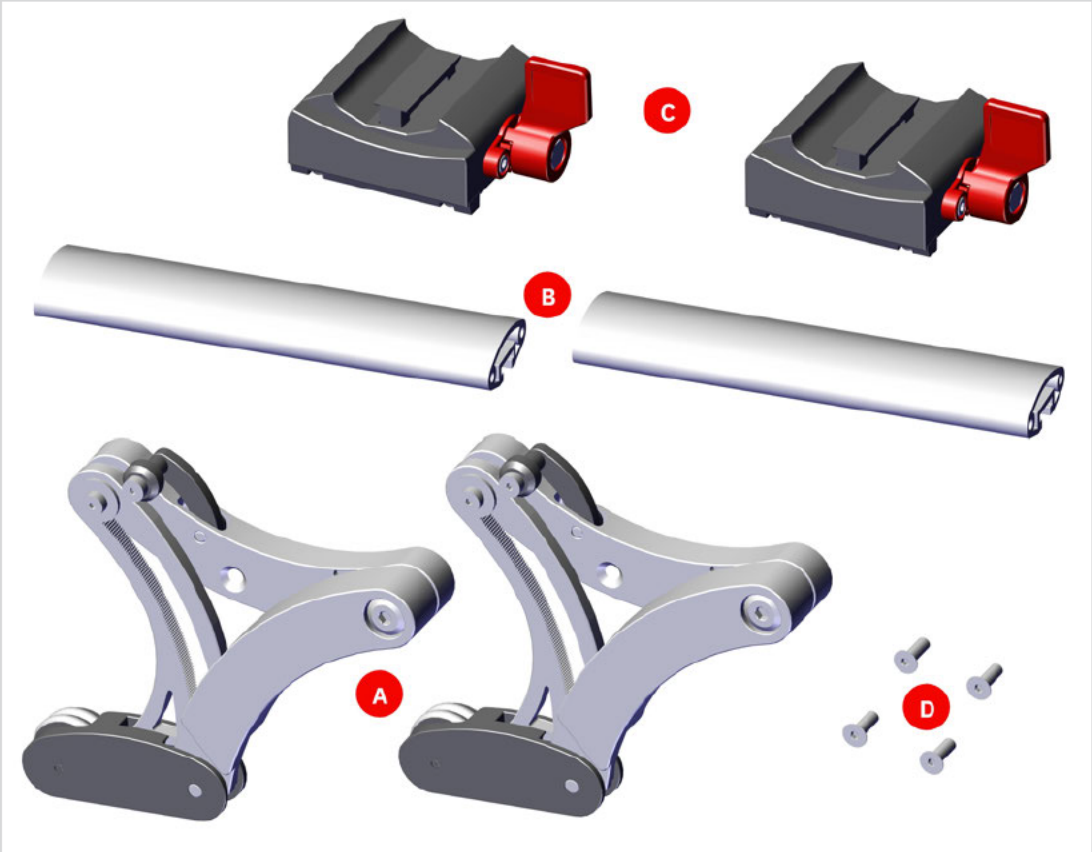

COMPATIBILITY

This manual primarily illustrates placement of the guides on the left side of the rip fence for table saw use. Note that it is not possible to use the guides while the rip fence is located left of the saw blade.

If your saw is equipped with an in-line router table, the guides can also be installed on the right side of the rip fence to provide workpiece management with router operations. A sacrificial fence with a gap can also be added to accommodate the bit for making rabbet cuts or any cut where the bit is not fully engaged in the workpiece.

Table Saw Use

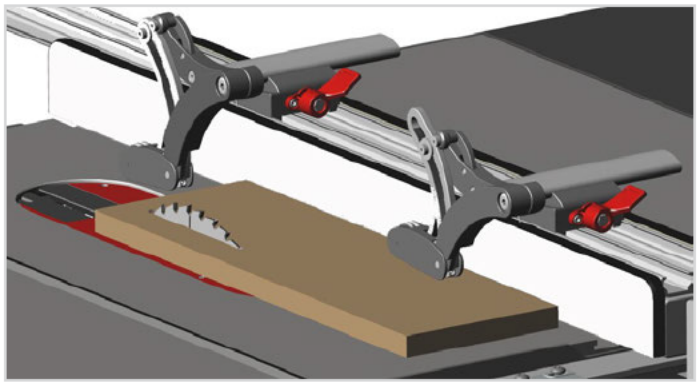

In-line Router Table Use

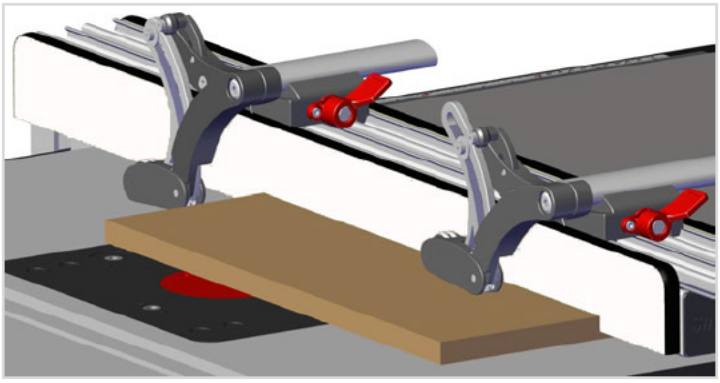

SAFETY

- Be sure to wear hearing protection, eye protection, and follow all normal shop safety practices at all times.
- Before starting any cutting/milling operations with your WorkTrack guides, ensure the guides are securely fixed to the WorkTrack rail.
- Take care not to drop the tool.
- Never let the saw blade or cutter in your machine come in contact with any component of your WorkTrack guides. Verify that nothing but the material you intend to cut or mill is in the path of the blade before turning on the tool.
- Always make sure workpieces are properly supported.
- Always take care to keep your hands clear of saw blade. Use the blade guard.
- After adjusting the position of the guides in relation to the fence, remember to lock the mechanism to ensure the guides do not move unexpectedly during cutting operations.
- Be aware of possible pinch risk when extending or retracting the WorkTrack guides.
- Do not attempt to cut warped wood or wood of uneven or inconsistent thickness.
- Do not attempt to use the guides with the rip fence placed to the left of the table saw blade.
- The rip fence and guides should remain on the right of the saw blade. Do not extend the guides past the cut line.
- When using with an in-line router table, the feed direction must be right-to-left for all cuts—against the rotation of the cutters. This helps to avoid losing control of the workpiece while feeding it past the bit when only a portion of the cutter is engaged in the workpiece.
- Replace worn tires. Severely worn tires reduce the ability of the guides to hold and guide the workpiece, increasing risk of kickback and potential for injury.
- To reduce the risk of dropping the guides and potential for injury, remove guides before removing rip fence from saw.
- The Carriage can slide off of the Extension Arm unexpectedly when the assembly is not locked into the WorkTrack rail. Reduce the risk of dropping parts by taking care to grip both the Carriage and the Guide Assembly when transporting them to and from the saw.

ASSEMBLY

1. Squeeze the guide assembly foot toward the upper
   Guide Assembly arc to expose the two counter-sunk mounting holes for the supplied M5x.08 bolts (D).

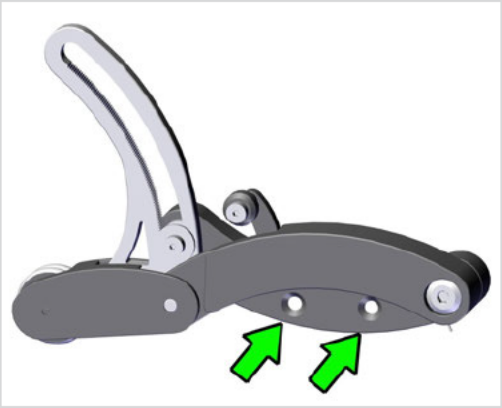

2. Insert Extension Arm (B) into the recess of the Guide Assembly (A) as-shown.

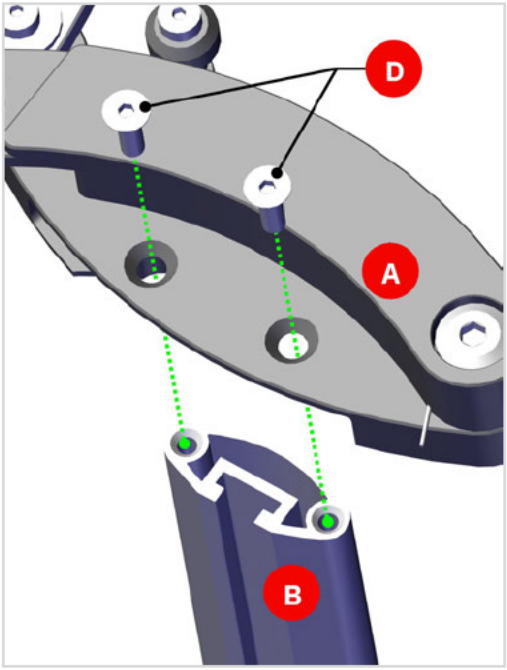

Only one end of the Extension Arm (B) has counter-sunk, threaded holes to receive the M5 bolts (D). Align those holes with the holes of the Guide Assembly (A) as shown.

3. Secure the Extension Arm (A) to the Guide Assembly (B) using the included 3mm hex wrench to tighten the bolts (D).
4. Repeat these steps for the second Extension Arm and Guide Assembly.

INSTALLATION

1. Open the locking lever on the Carriage (C) to the unlocked (vertical) position by rotating it to the left as seen below.
2. Align the T-shaped guide (highlighted in blue) on the underside of the Carriage (C) with the channel in the center of the rail as shown.

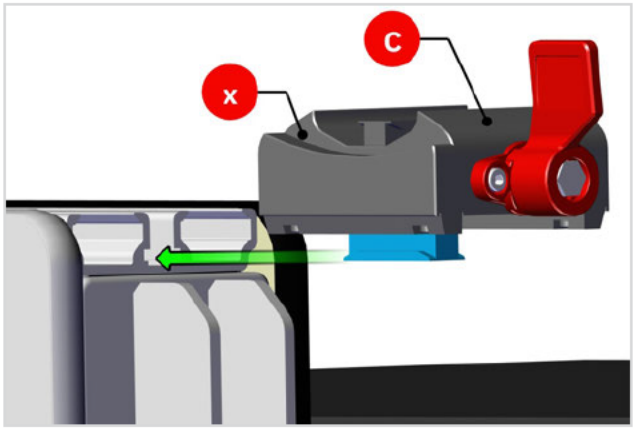

With the recessed side of the carriage (x) facing toward the blade or cutter, press the locking lever inward as you slide the Carriage onto the rail.

3. Insert the Extension Arm (B) into the arc-shaped recess on the top side of the Carriage (C) as shown.

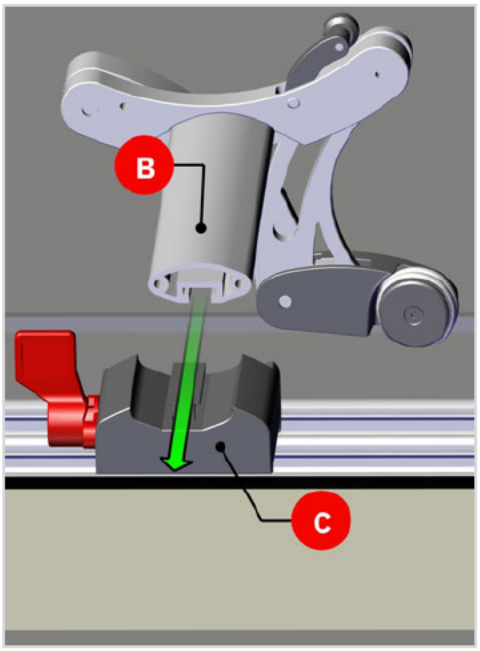

4. With the Guide Assembly in the lowered position, align the heel of the guide (highlighted in blue) with the black rectangular area of the table insert as shown.

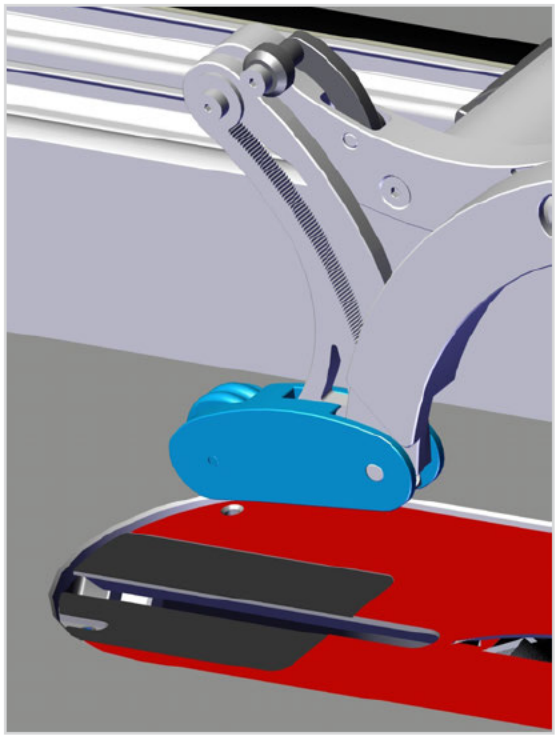

5. Extend or retract the assembly in relation to the fence to suit the size of the workpiece to be cut. It can be beneficial to extend it further from the fence for a wider workpiece. Position it closer to the fence for a more narrow workpiece.

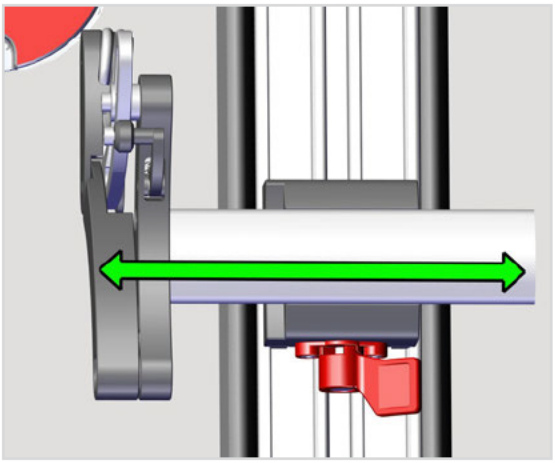

WARNING:

To ensure maximum stability of the guides and minimize kickback risk, do not extend the trailing end of the Extension Arm beyond the right side edge of the Carriage. This ensures the entire clamping surface area of the Carriage is fully engaged with the Extension Arm and that it cannot shift while the workpiece is being fed.

WARNING:

To avoid severe injury, do not attempt to adjust the guides while the saw is running.

IMPORTANT:

Maintain a minimum of 2mm between the roller assembly and the fence. The mechanism will not function if it is in direct contact with the fence face.

6. Lock the Carriage in place by rotating the locking lever to the right. This secures the Carriage to the rail while simultaneously fixing the Extension Arm at your desired distance from the fence.

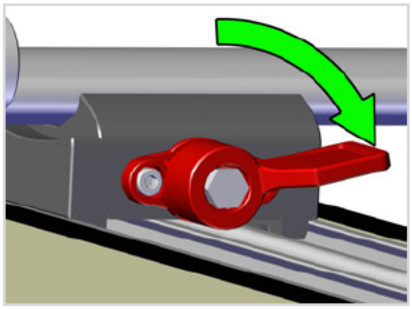

WARNING:

Failure to lock the Carriage in place could result in damage to the guides, workpiece kickback and possible severe injury. If the clamping force is insufficient, it can be adjusted using the instructions on page 9.

7. Repeat steps 1-6 for the second Carriage with the "toe" of the roller assembly positioned even with the leading edge of the table insert as shown.

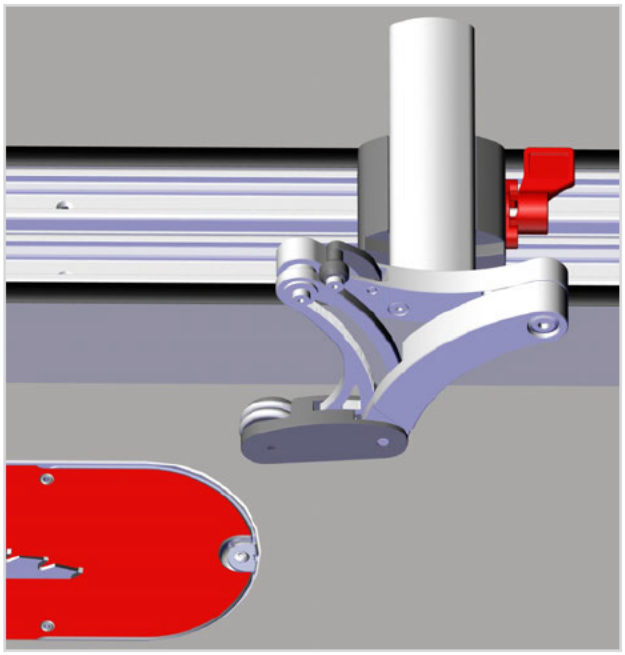

OPERATION

Register your workpiece against the fence and begin feeding it across the saw table as usual. When the workpiece comes in contact with the roller of the material guide, it will automatically rise and adjust to the thickness of the workpiece and simultaneously lock itself at that height.

FUNCTION

Once the workpiece has engaged with the mechanism:

- The guide rollers maintain downward pressure on the material during cutting operations. This keeps the workpiece flush to the saw table.
- The angled roller directs the workpiece against the fence.
- The grip rollers rotate in a forward direction only. This helps to prevent kickback.

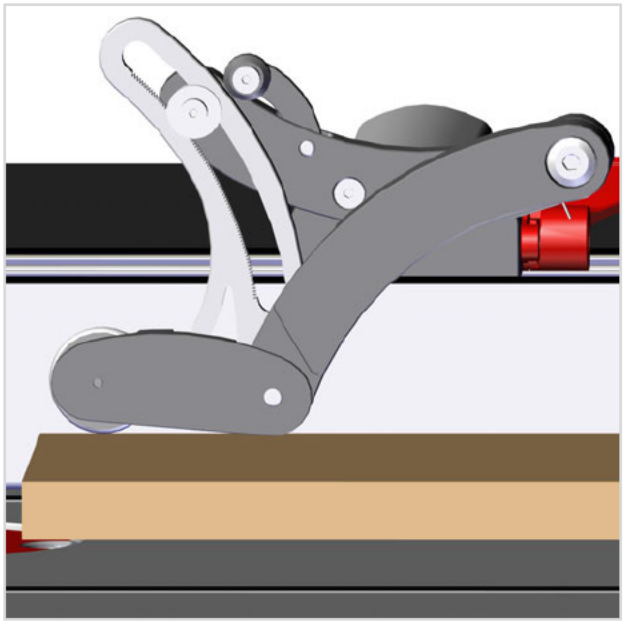

- When the workpiece moves past the guide roller, the mechanism automatically drops to the neutral, lowered position.

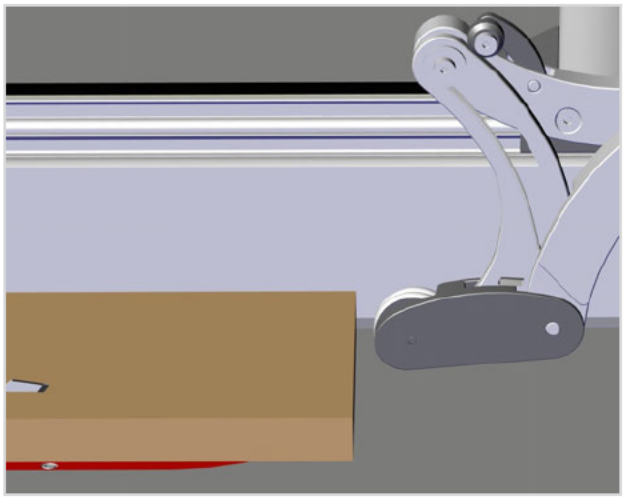

REMOVING THE WORKPIECE EARLY

Should you need to remove the workpiece after the grip roller engages but before completing the cut, you must first release the mechanism. To release your workpiece from the guide, turn off the saw if it is running. Next, push forward at the tip of the silver ratchet arc.

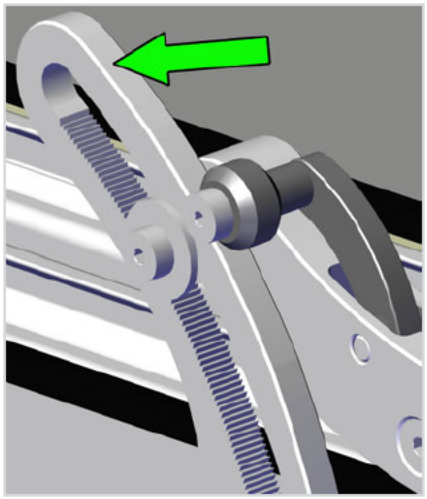

Next, lift the mechanism upward, then remove your workpiece.

RETRACTING THE GUIDES

When the material guides are no longer needed, they can be stowed as shown below.

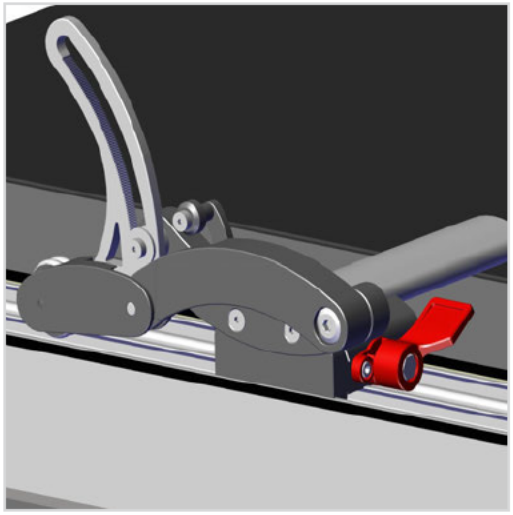

To stow the material guides:

1. Rotate the locking lever counter-clockwise to the unlocked (vertical) position.

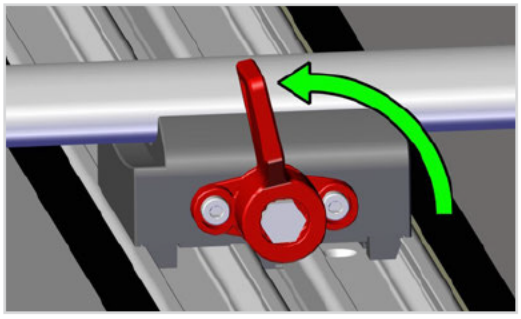

2. Lift the mechanism to the fully raised/collapsed position then push it toward the fence until the entire mechanism rests on top of the fence.

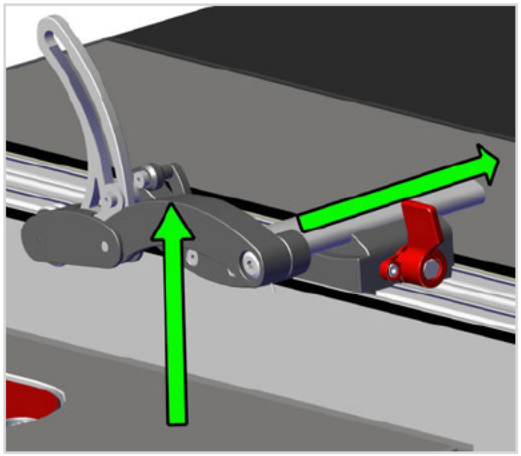

3. Rotate the locking lever clockwise to the locked (horizontal) position to secure the mechanism in this storage position.

ADJUSTING MINIMUM HEIGHT FROM SAW TABLE

The guides come factory set to hover approximately 2mm above the saw table. If you need to run very thin material, a lower setting may be needed. Adjust the set screw (highlighted in blue) at the "heel" of the guide mechanism to change the height of the material guide.



- Rotate the set screw counter-clockwise to lower the roller.
- Rotate the set screw clockwise to raise the roller.

WARNING:

Do not completely lower the mechanism such that it is in contact with the saw table. Doing so will cause the rollers to drag on the table, interfering with fence positioning and potentially damaging the rollers.

ADJUSTING LOCKING LEVER CLAMPING FORCE

The clamping force of the locking lever can be adjusted if needed. Adjustment should only be made if insufficient friction is present when in the locked position, or the lever doesn't disengage to allow the carriage to slide freely when in the unlocked position.

Should you wish to change the clamping force, follow the instructions below.

1. Using the provided 3mm hex wrench, remove the flat head bolt (shown in blue) from the carriage assembly.

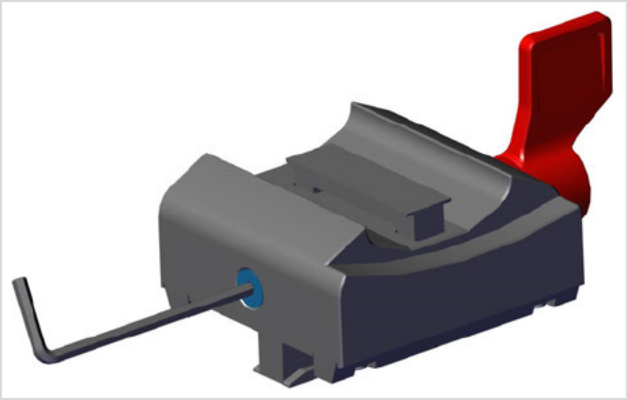

Set the bolt aside for later re-installation.

2. Insert the hex wrench into the opening, and engage the end of the clamping bolt.

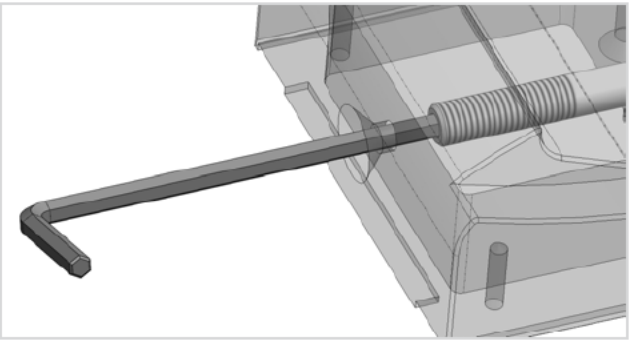

3. While pressing the plastic handle of the locking lever towards the Carriage, rotate the hex wrench to turn the hex head bolt. There are flats in the plastic handle that mate with the corners on the bolt. Adjustment should only require advancing or retreating one or two flats to reach the desired fit.

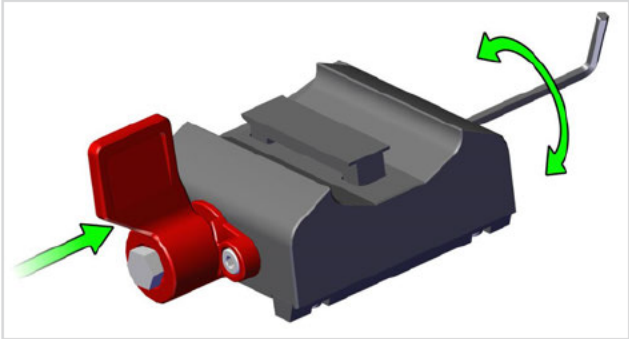

Rotate clockwise to loosen the fit in the WorkTrack or counter-clockwise to tighten the fit.

4. Test the clamping force: Insert the Carriage (C) into the WorkTrack and add the guide assembly to the Carriage as shown. Check that the locking lever provides the desired friction in the locked position and sufficient freedom of movement in the unlocked position.

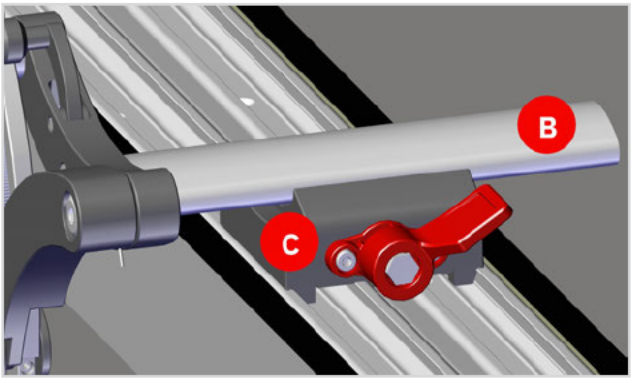

IMPORTANT:

For an accurate test of the clamping force, the Extension Arm (B) MUST be installed onto the Carriage (C).

5. Repeat steps 3 and 4 until you are satisfied with the fit.
6. Using the included 3mm hex wrench, reinstall the flat head bolt you removed during step 1.

TROUBLESHOOTING

PROBLEM	POSSIBLE CAUSE(S)	SOLUTION
The carriage has too much play.	There are two adjustable glide pads on the bottom of the guide assembly carriage (shown in blue). These can be adjusted to optimize the fit of the carriage within the rail. They may need adjustment. 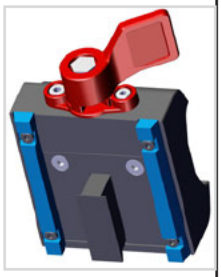	Using a 2mm hex wrench, loosen the screws that hold the glide pads in place. The holes in the glide pads are slightly oversized such that they can be repositioned to the left or right. Position the glide pads as needed and re-tighten the screws. Test the fit and adjust again if needed.
	The glide pads on the underside of the carriage are worn.	Replacements are available for purchase. Visit the SawStop online parts store for details.
The downward force and biasing force is insufficient and the work piece slides too freely.	The O-rings on the rollers are worn.	Replacement O-rings are available for purchase. Visit the SawStop online parts store for details.
	The minimum height adjustment of the guide(s) needs to be lowered.	Follow the instructions for **ADJUSTING MINIMUM HEIGHT FROM SAW TABLE** on page 8.
	The guide foot tension needs to be adjusted. 	Make a small adjustment to the set screw located on the bottom of the guide foot (shown in blue). Turn the set screw clockwise to increase the downward force of the guide foot.
The roller wheel drags on the saw table.	The minimum height adjustment of the guide(s) needs to be raised.	Follow the instructions for **ADJUSTING MINIMUM HEIGHT FROM SAW TABLE** on page 8.
The mechanism locks too early or does not lock to the thickness of the workpiece.	The bias arc spring needs to be adjusted. 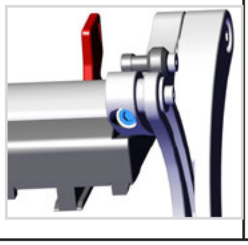	Adjust the set screw located at the far end of the horizontal arc (shown in blue). Turn the set screw clockwise if the mechanism doesn't lock. Adjust it counter-clockwise if the mechanism locks too early.

LIMITED WARRANTY

SawStop warrants to the original retail purchaser of a new WorkTrack guides from an authorized SawStop distributor that the WorkTrack guides will be free from defects in material and workmanship for ONE YEAR from the date of purchase (with product registration) and that the electric motor supplied with the saw will be free from defects in material and workmanship for FIVE YEARS from the date of purchase. SawStop warrants to the original retail purchaser of a refurbished product from an authorized SawStop distributor that the WorkTrack guides will be free from defects in material and workmanship for SIX MONTHS from the date of purchase (with product registration).

This warranty does not apply to defects arising from misuse, abuse, negligence, accidents, normal wear-and-tear, unauthorized repair or alteration, or lack of maintenance. This warranty is void if the WorkTrack guides or any portion of the WorkTrack guides is modified without the prior written permission of SawStop, LLC, or if the WorkTrack guides is located or has been used outside of the country where the authorized SawStop distributor from whom the product was purchased resides.

Please contact SawStop to take advantage of this warranty. If SawStop determines the WorkTrack guides is faulty in material or workmanship, and not due to misuse, abuse, negligence, accidents, normal wear-and-tear, unauthorized repair or alteration, or lack of maintenance, then SawStop will, at its expense and upon proof of purchase, send replacement parts to the original retail purchaser necessary to cure the defect.

SawStop disclaims any and all other express or implied warranties, including merchantability and fitness for a particular purpose. SawStop shall not be liable for death, injuries to persons or property, or incidental, consequential, contingent or special damages arising from the use of this WorkTrack guides.

This limited warranty gives you specific legal rights. You may have other rights which, in the United States, vary from state to state.

SAWSTOP

USA/Canada

SawStop
11555 SW Myslony Street
Tualatin, OR 97062 USA

SawStop.com/Support
TechnicalSupport@SawStop.com
503-582-9934

Parts available for purchase at
SawStop.com

Australia

Carbatec.com.au/contact
customercare@carbatec.com.au

85-009085-00
Rev A - 11092026