SAWSTOP

Parts List Catalog

Models TSA-WT, TSA-WTG, TSA-WTC, and TSA-WTS

WorkTrack™



SAWSTOP.COM

Table of Contents



Rail TSA-WT



Guides TSA-WTG



Sled TSA-WTS



Carriers TSA-WTC

WorkTrack Rail

Installation Service Kit for TSA-WT 3

WorkTrack Carrier

Rollers Service Kit for TSA-WTC and TSA-WTS 4
Locking Knob Service Kit for TSA-WTC 5
Base Service Kit for TSA-WTC 6
Wedges Service Kit for TSA-WTC and TSA-WTS 7

WorkTrack Sled

Rollers Service Kit for TSA-WTC and TSA-WTS 4
Wedges Service Kit for TSA-WTC and TSA-WTS 7
Workpiece Support Service Kit for TSA-WTS 8
Main Fence Service Kit for TSA-WTS 9
Cart Service Kit for TSA-WTS 10
Cart Service Kit for TSA-WTS (Cont.) 11
Glide Pads Service Kit for TSA-WTS 12
Mounting Bracket Service Kit for TSA-WTS 13
Shelf Mounting Hardware Service Kit for TSA-WTS 14
Clamping Foot Service Kit for TSA-WTS 15
Manual for TSA-WTS 16

WorkTrack Guide

Base Service Kit for TSA-WTG 17
Aerofoil Service Kit for TSA-WTG 18
Wheel Service Kit for TSA-WTG 19
Pivot Arcs Service Kit for TSA-WTG 20
Pivot Arcs Service Kit for TSA-WTG (Cont.) 21
Fixed Arc Service Kit for TSA-WTG 22
Arc Wheel Service Kit for TSA-WTG 23
Glide Strips Service Kit for TSA-WTG 24
Springs Service Kit for TSA-WTG 25
Manual for TSA-WTG 26

Installation Service Kit for TSA-WT

WTP-001

WorkTrack Rail

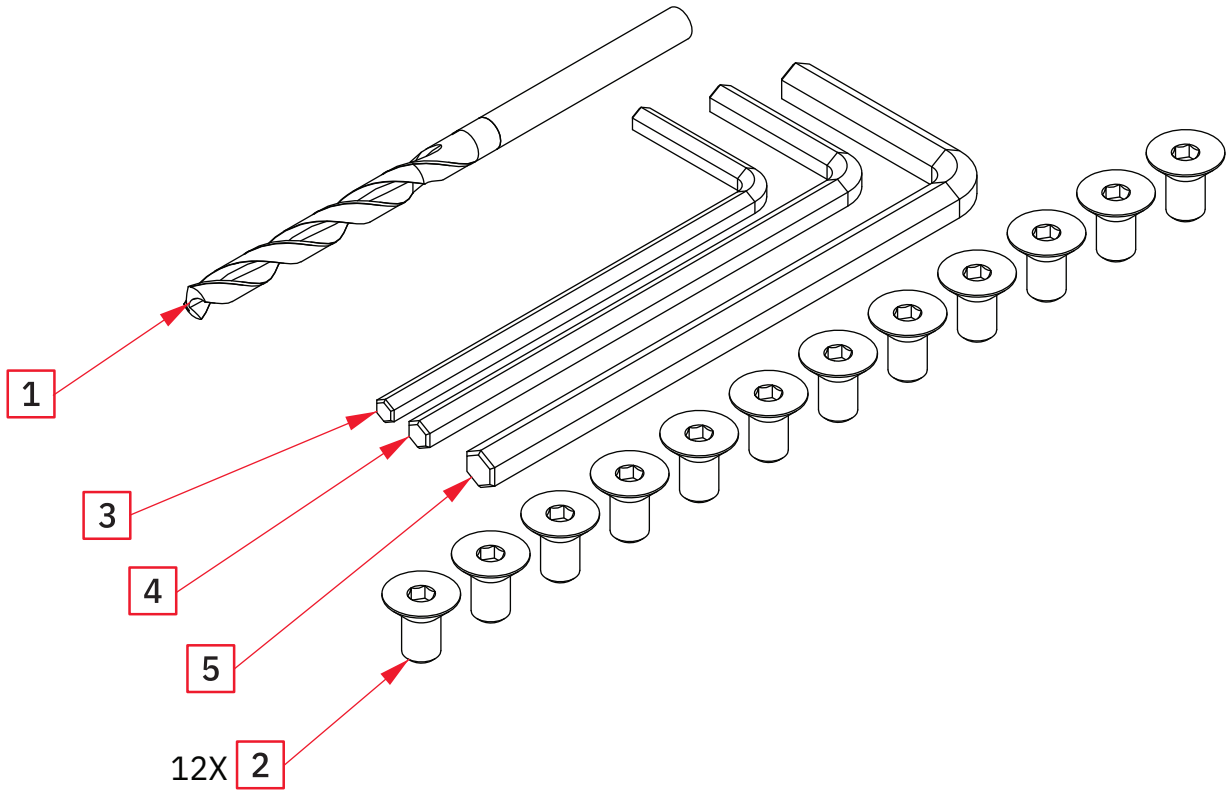

BILL OF MATERIALS		
ITEM NO.	**DESCRIPTION**	**QTY**
1	Drill Bit, 3.65mm, WorkTrack Rail	1
2	Screw, M4x0.7, 8mm, Flat Head, Thread Forming, Hex Drive, Silver Zinc	12
3	L-Wrench, Hex, 2.5mm	1
4	L-Wrench, Hex, 3mm	1
5	L-Wrench, Hex, 4mm	1

Rollers Service Kit for TSA-WTC and TSA-WTS

WTP-002

WorkTrack Carrier and Sled

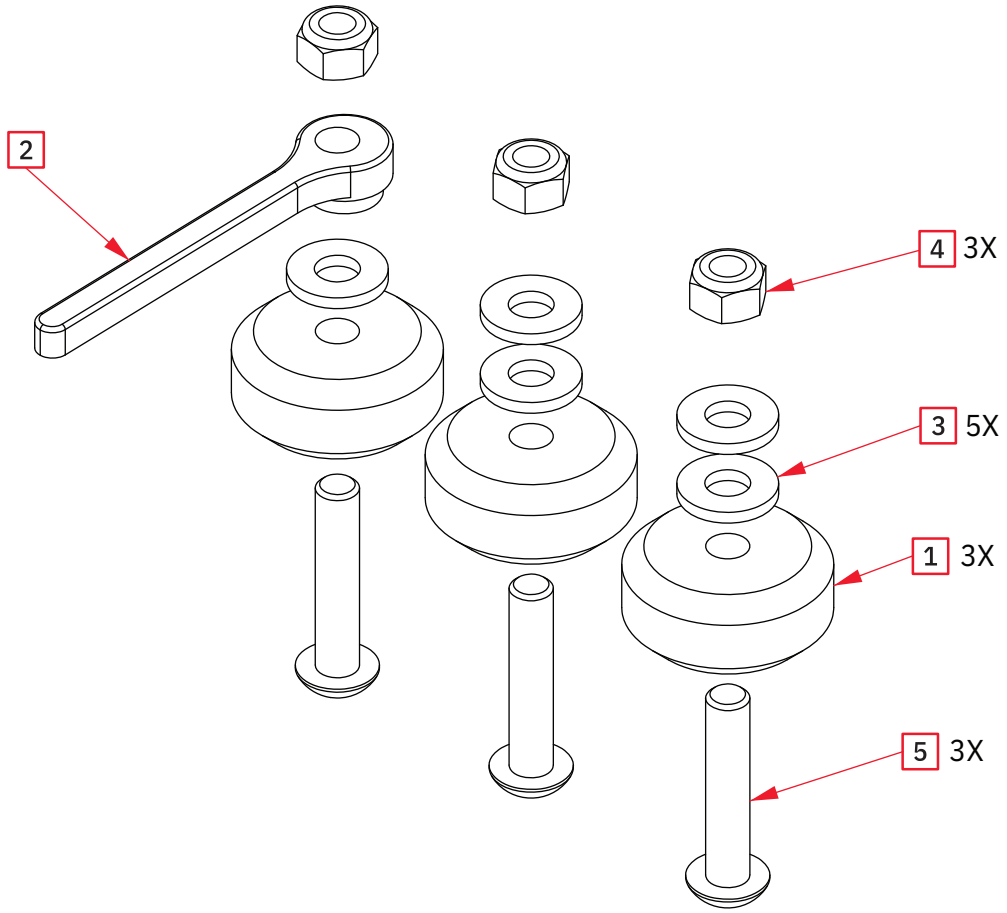

BILL OF MATERIALS		
ITEM NO.	**DESCRIPTION**	**QTY**
1	Roller, Cart, WorkTrack	3
2	Lever, Eccentric, WorkTrack	1
3	Washer, M5, Flat, 11.5mm ODx1.5mm THK, Silver Zinc	5
4	Nut, M5x0.8, Nylon Insert, Silver Zinc	3
5	Bolt, M5x0.8, 25mm, Button Head, Silver Zinc	3

Locking Knob Service Kit for TSA-WTC

WTP-003

WorkTrack Carrier

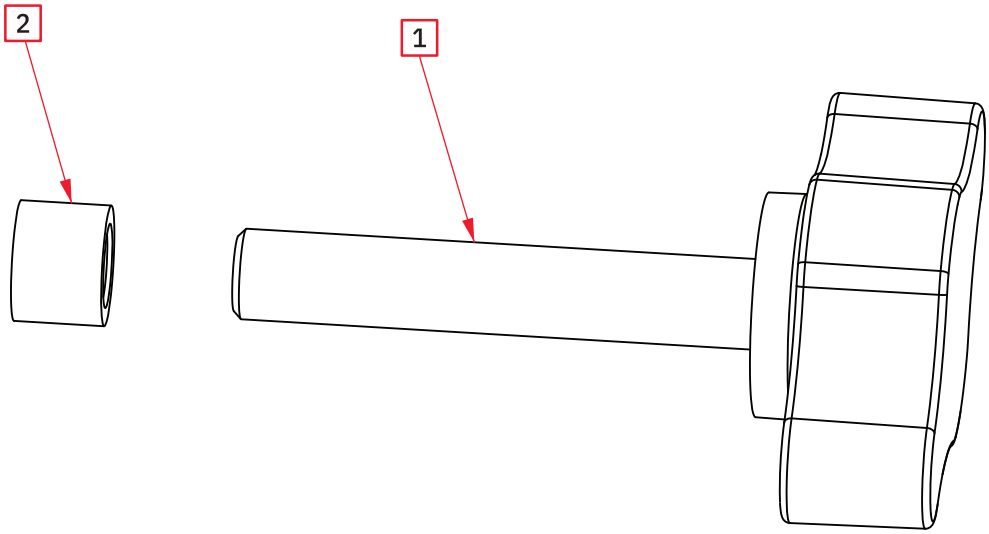

BILL OF MATERIALS		
ITEM NO.	**DESCRIPTION**	**QTY**
1	Knob, WorkTrack Carrier	1
2	Tip, M6 Locking, WorkTrack Carrier	1

Base Service Kit for TSA-WTC

WTP-004

WorkTrack Carrier

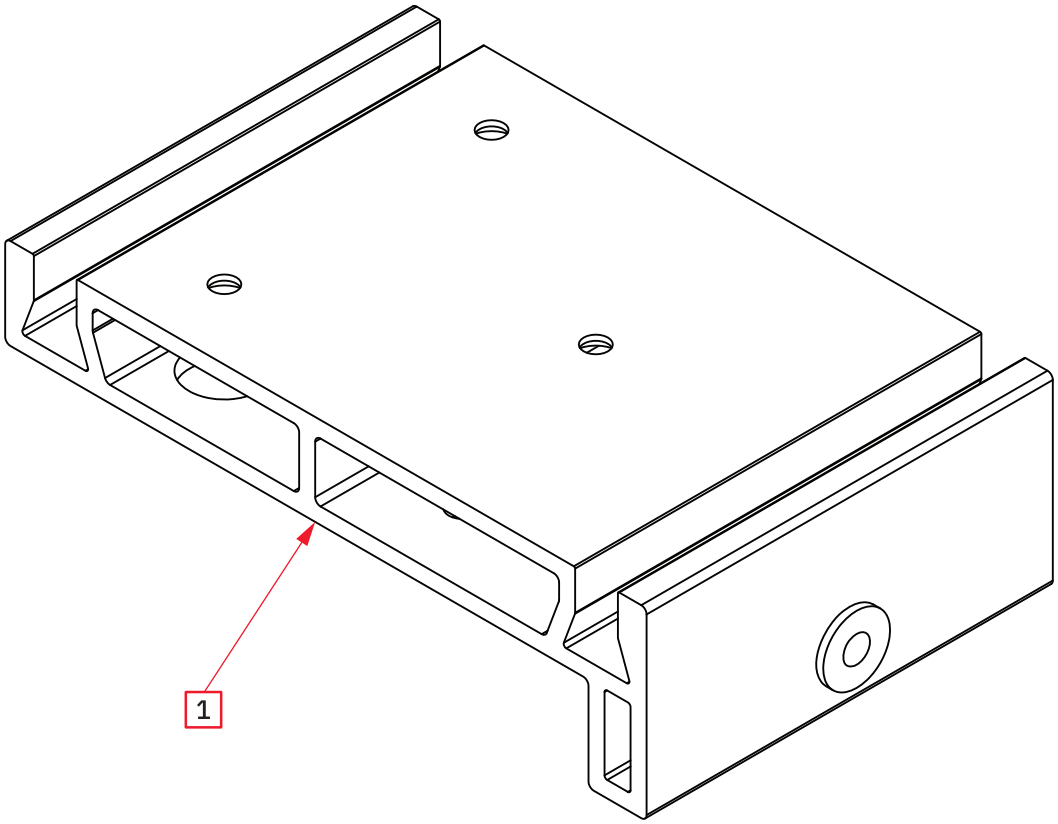

BILL OF MATERIALS		
ITEM NO.	**DESCRIPTION**	**QTY**
1	Base, Subassembly, WorkTrack Carrier	1

Wedges Service Kit for TSA-WTC and TSA-WTS

WTP-005

WorkTrack Carrier and Sled

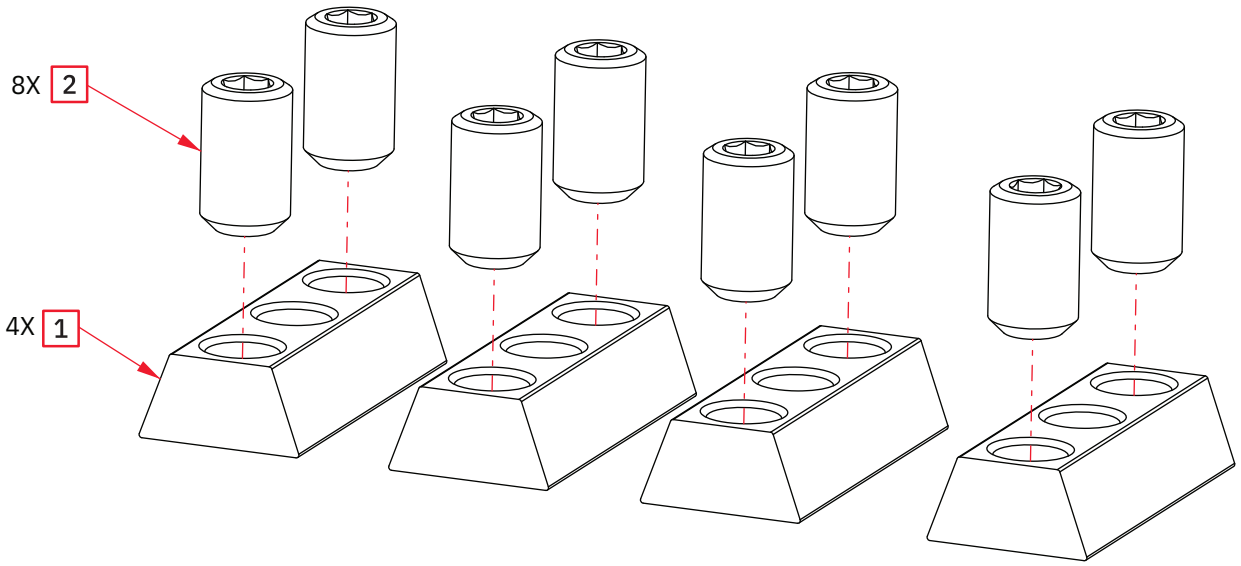

BILL OF MATERIALS		
ITEM NO.	**DESCRIPTION**	**QTY**
1	Wedge Clamp, Miter Fence, Revolution	4
2	Set Screw, M6x1.0, 10mm, Silver Zinc	8

Workpiece Support Service Kit for TSA-WTS

WTP-006

WorkTrack Sled

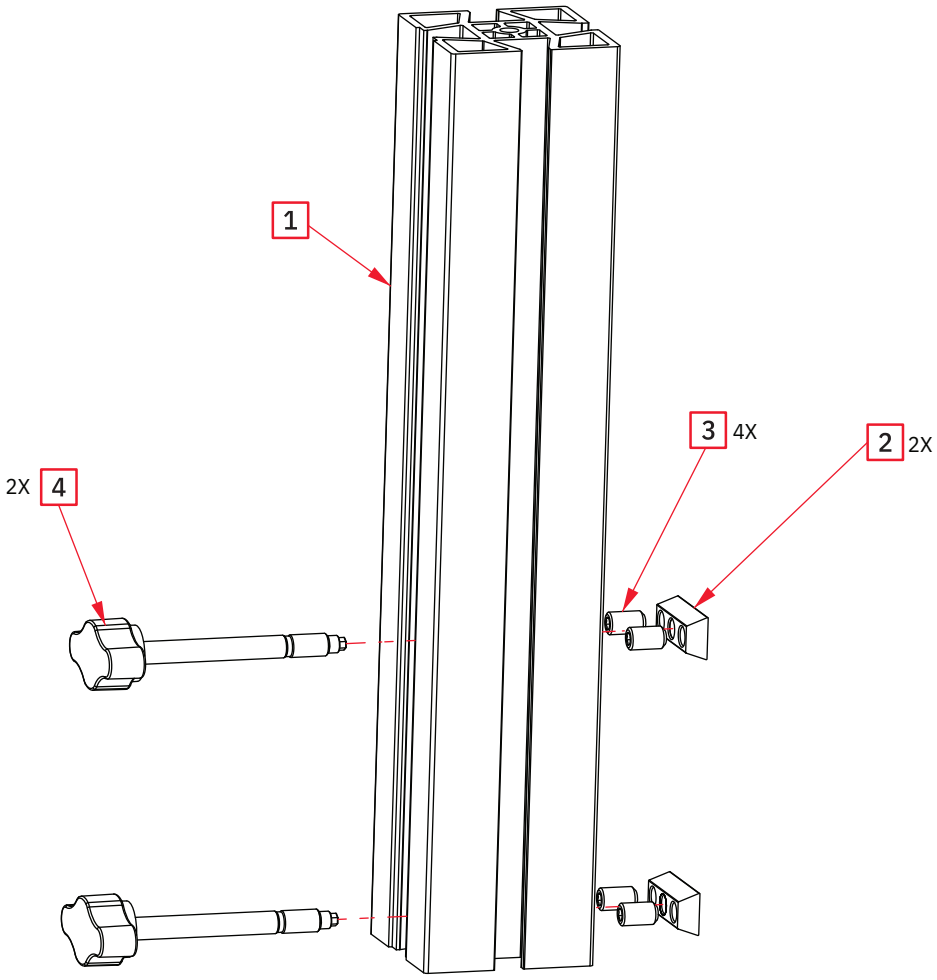

BILL OF MATERIALS		
ITEM NO.	**DESCRIPTION**	**QTY**
1	Vertical Fence, WorkTrack Sled	1
2	Wedge Clamp, Miter Fence, Revolution	2
3	Set Screw, M6x1.0, 10mm, Silver Zinc	4

Main Fence Service Kit for TSA-WTS

WTP-007

WorkTrack Sled

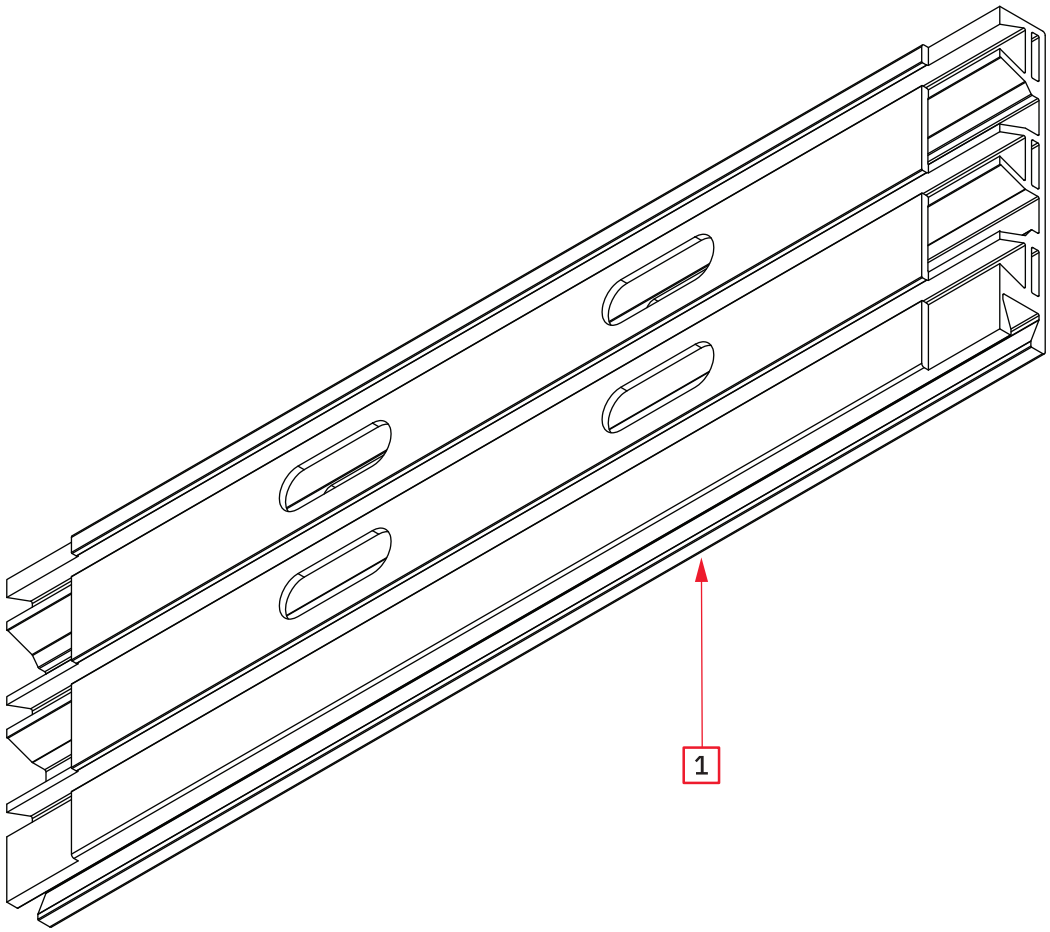

BILL OF MATERIALS		
ITEM NO.	**DESCRIPTION**	**QTY**
1	Main Face, WorkTrack Sled	1

Cart Service Kit for TSA-WTS

WTP-008

WorkTrack Sled

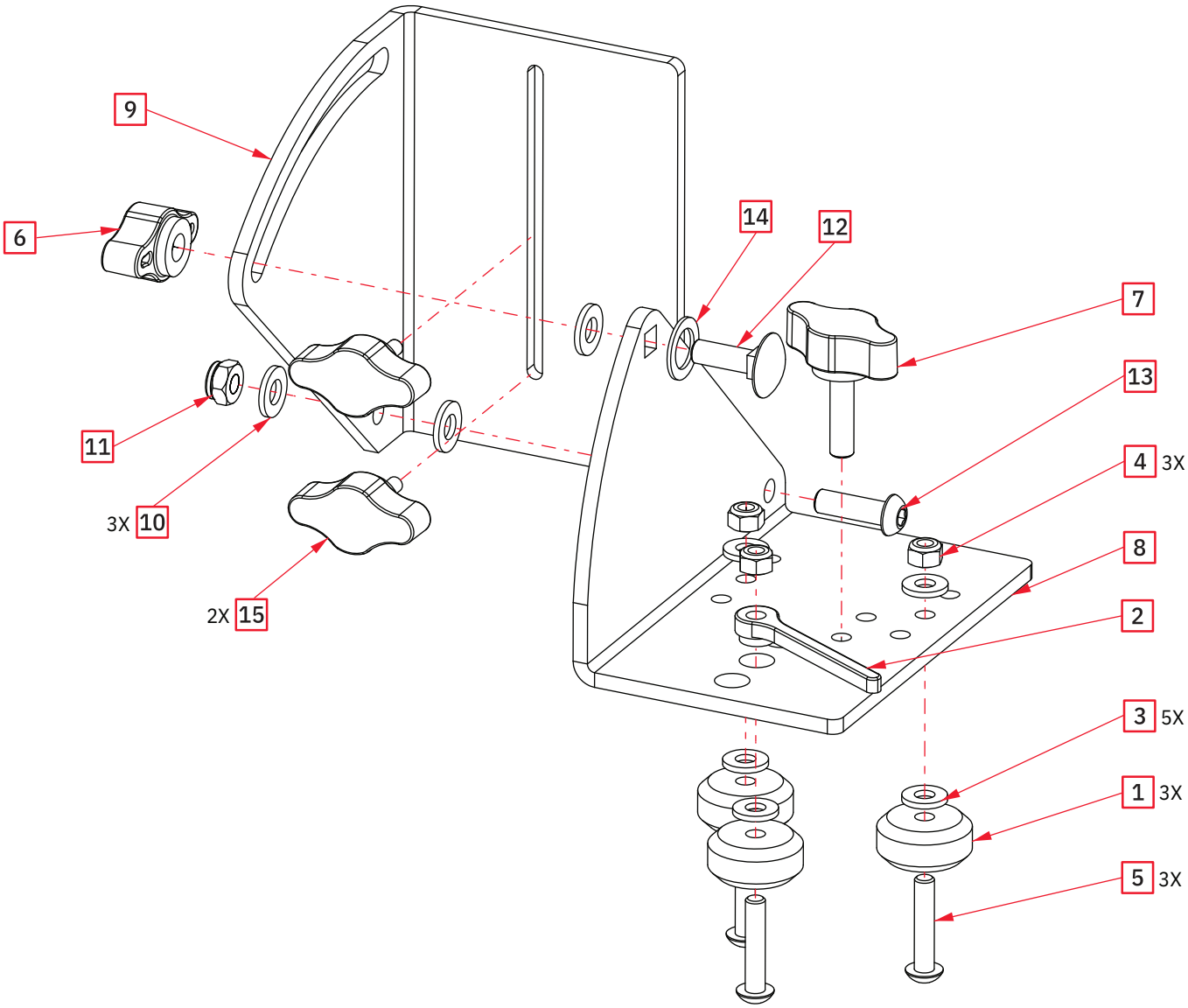

Cart Service Kit for TSA-WTS (Cont.)

WTP-008

WorkTrack Sled

BILL OF MATERIALS		
ITEM NO.	**DESCRIPTION**	**QTY**
1	Roller, Cart, WorkTrack	3
2	Lever, Eccentric, WorkTrack	1
3	Washer, M5, Flat, 11.5mm ODx1.5mm THK, Silver Zinc	5
4	Nut, M5x0.8, Nylon Insert, Silver Zinc	3
5	Bolt, M5x0.8, 25mm, Button Head, Silver Zinc	3
6	Knob, Cart Angle, WorkTrack Sled	1
7	Knob, Cart Locking, WorkTrack Sled	1
8	Cart Bracket, Base, WorkTrack Sled	1
9	Cart Bracket, Adjuster, WorkTrack Sled	1
10	Washer, M6, Flat, 13mm ODx1.5mm THK, Silver Zinc	3
11	Nut, M6x1.0, Nylon Insert, Silver Zinc	1
12	Bolt, M6x1.0, 20mm, Carriage, Silver Zinc	1
13	Bolt, M6x1.0, 20mm, Pan Head, Silver Zinc	1
14	Washer, Flat, M10, 16mm ODx1mm THK, Silver Zinc	1
15	Knob, Main Face, WorkTrack Sled	2

Glide Pads Service Kit for TSA-WTS

WTP-009

WorkTrack Sled

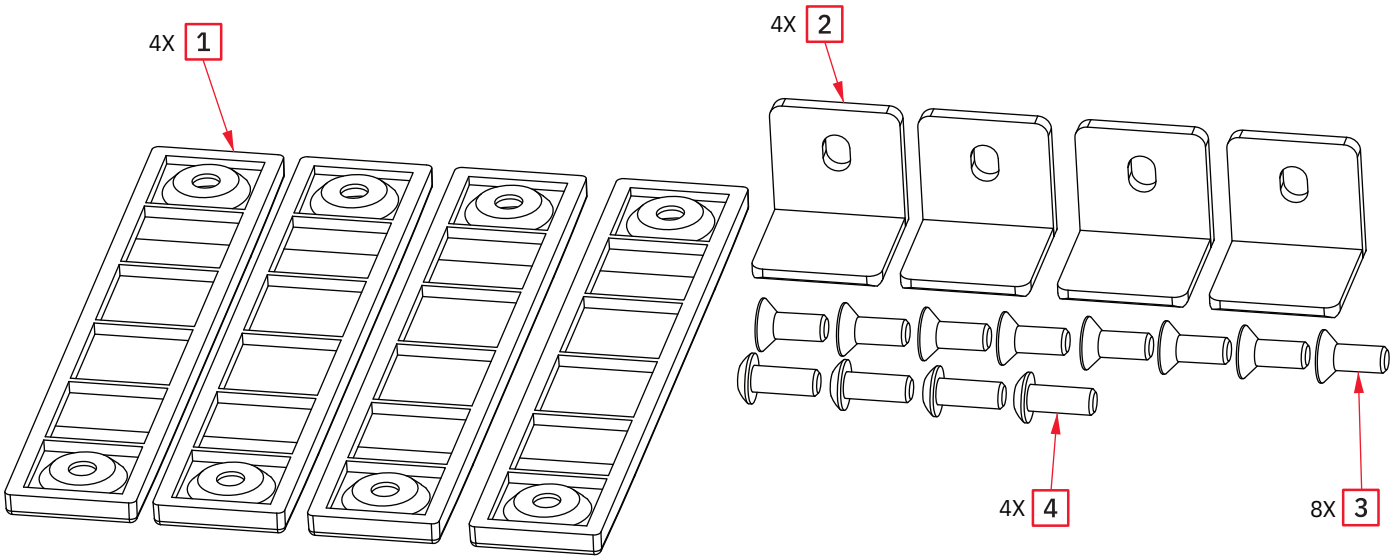

BILL OF MATERIALS		
ITEM NO.	**DESCRIPTION**	**QTY**
1	Glide Pad, Joinery, WorkTrack Sled	4
2	Glide Pad, Tenon, WorkTrack Sled	4
3	Bolt, M4x0.7, 10mm, Flat, Silver Zinc	8
4	Bolt, M4x0.7, 10mm, Pan Head, Silver Zinc	4

Mounting Bracket Service Kit for TSA-WTS

WTP-010

WorkTrack Sled

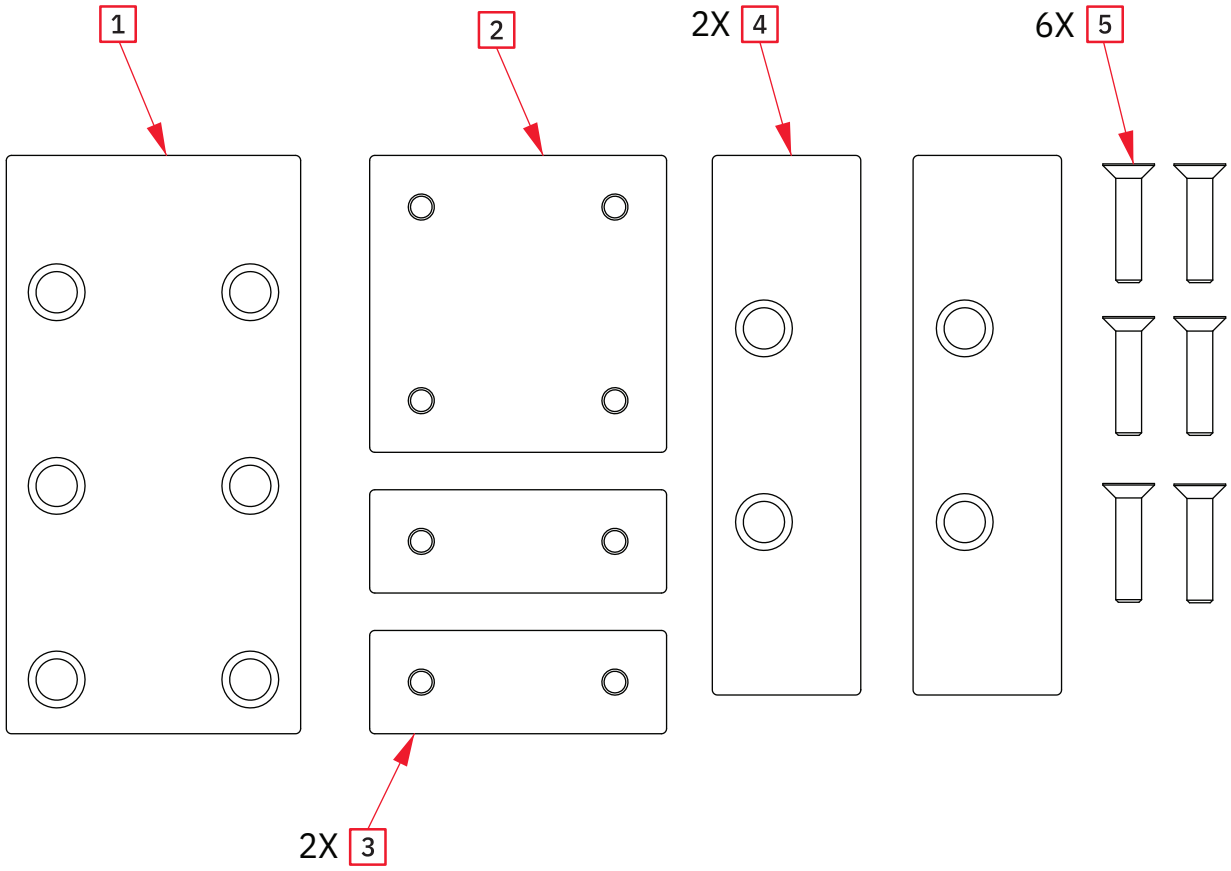

BILL OF MATERIALS		
ITEM NO.	**DESCRIPTION**	**QTY**
1	Bracket, Front, 4 Connector, WorkTrack Sled	1
2	Bracket, Back, 4 Connector, WorkTrack Sled	1
3	Bracket, Back, 2 Connector, WorkTrack Sled	2
4	Bracket, Front, 2 Connector, WorkTrack Sled	2
5	Bolt, M5x0.8, 23mm, Flat, Silver Zinc	6

Shelf Mounting Hardware Service Kit for TSA-WTS

WTP-011

WorkTrack Sled

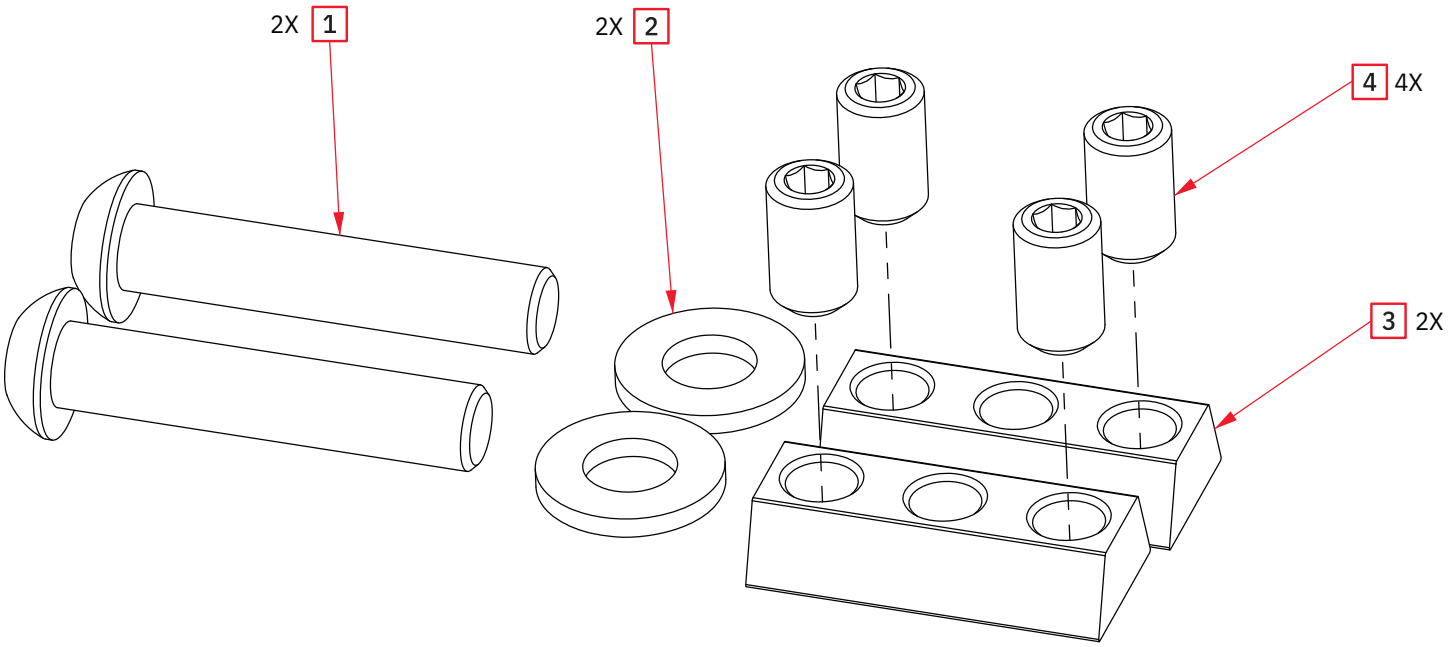

BILL OF MATERIALS		
ITEM NO.	**DESCRIPTION**	**QTY**
1	Bolt, M6x1.0, 30mm, Pan Head, Silver Zinc	2
2	Washer, M6, Flat, 13mm ODx1.5mm THK, Silver Zinc	2
3	Wedge Clamp, Miter Fence, Revolution	2
4	Set Screw, M6x1.0, 10mm, Silver Zinc	4

Clamping Foot Service Kit for TSA-WTS

WTP-012

WorkTrack Sled

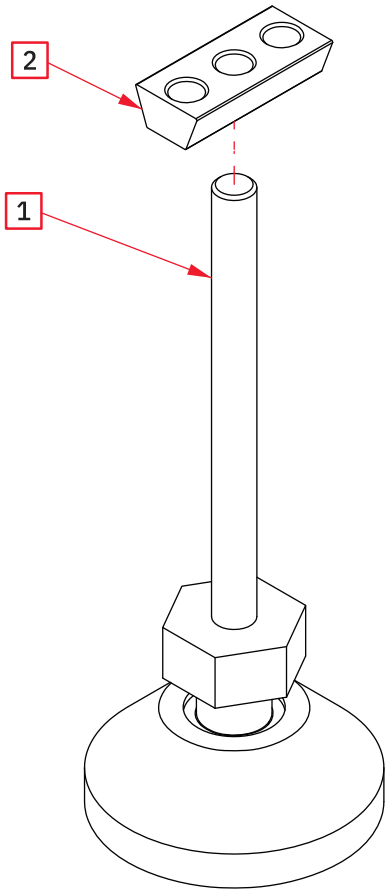

BILL OF MATERIALS		
ITEM NO.	**DESCRIPTION**	**QTY**
1	Foot, Clamp, WorkTrack Sled	1
2	Wedge Clamp, Miter Fence, Revolution	1

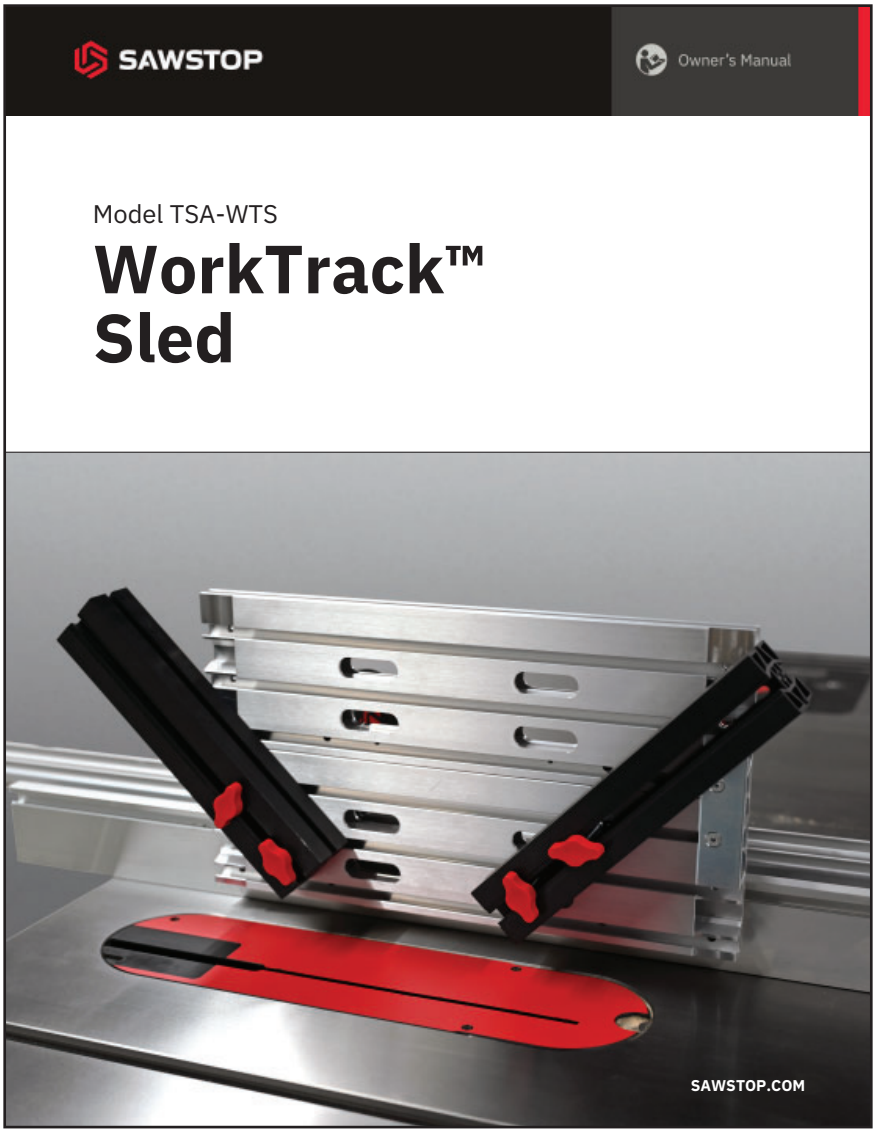

BILL OF MATERIALS		
ITEM NO.	**DESCRIPTION**	**QTY**
1	Owner's Manual, WorkTrack Sled	1

Base Service Kit for TSA-WTG

WTP-014

WorkTrack Guide

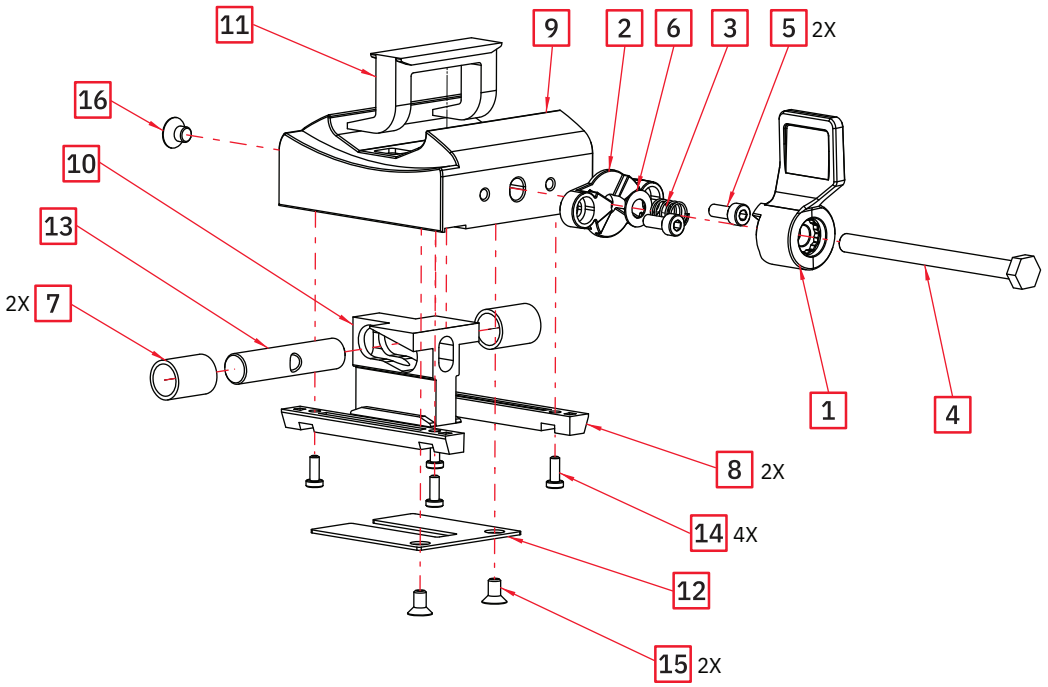

BILL OF MATERIALS		
ITEM NO.	**DESCRIPTION**	**QTY**
1	Clamp Handle, WorkTrack Guide	1
2	Clamp Base, Lock Handle, WorkTrack Guide	1
3	Spring, Clamp Handle	1
4	Bolt, M6x1.0, 80mm, Partially Threaded, Hex Head, Silver Zinc	1
5	Bolt, M4x0.7x10mm, Socket Head, Hex, Silver Zinc	2
6	Washer, M6, Flat, 12mm ODx0.5mm THK, SS	1
7	Bushing, Pull Rod, WorkTrack Guide	2
8	Glide Pads, Track Base, WorkTrack Guide	2
9	Track Base, WorkTrack Guide	1
10	Track Clamp, WorkTrack Guide	1
11	Aerofoil Clamp, WorkTrack Guide	1
12	Cover, Track Base, WorkTrack Guide	1
13	Pull Rod, Track Base, WorkTrack Guide	1
14	Bolt, M3x0.5, 8mm, Socket Head, Low Profile, Black Zinc	4
15	Screw, M4x0.7, 8mm, Flat Head, Thread Forming, Hex Drive, Silver Zinc	2
16	Bolt, M5x0.8, 6mm, Flat Head, Hex Drive, Black Zinc	1

Aerofoil Service Kit for TSA-WTG

WTP-015

WorkTrack Guide

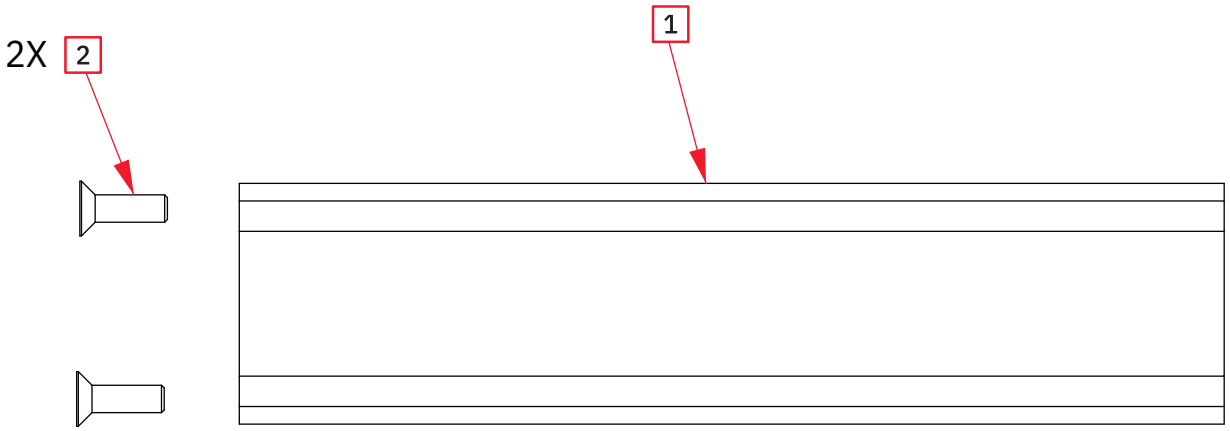

BILL OF MATERIALS		
ITEM NO.	**DESCRIPTION**	**QTY**
1	Aerofoil, WorkTrack Guide	1
2	Bolt, M5x0.8, 16mm, Countersink Head, Hex Drive, Silver Zinc	2

Wheel Service Kit for TSA-WTG

WTP-016

WorkTrack Guide

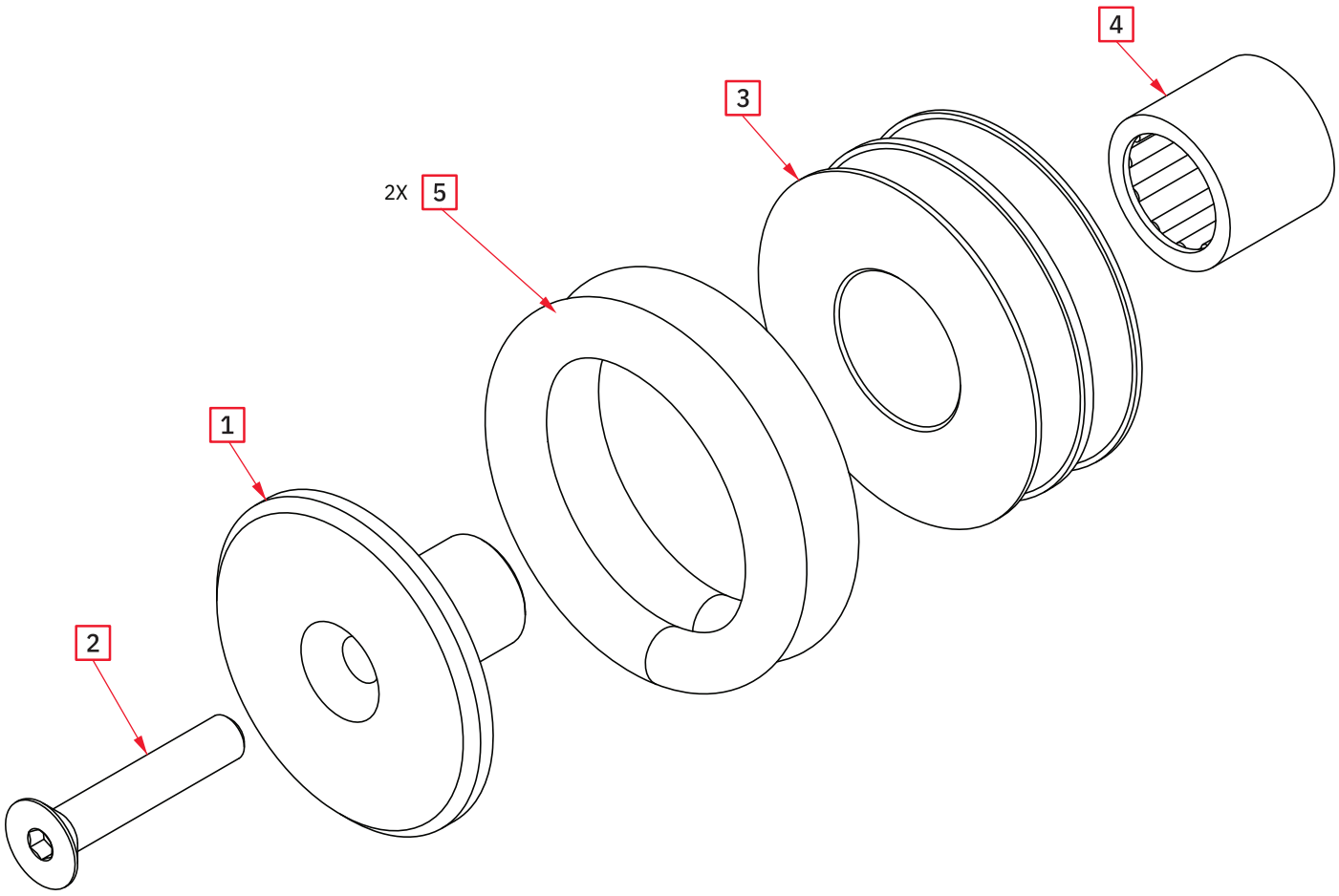

BILL OF MATERIALS		
ITEM NO.	**DESCRIPTION**	**QTY**
1	Wheel Holder, WorkTrack Guide	1
2	Bolt, M4x0.7, 22mm, Flat Head, Black Zinc	1
3	Wheel Base, WorkTrack Guide	1
4	One-Way Locking Bearing Clutch, 10mm ID, 14mm OD, 12mm THK	1
5	O-Ring, Polyurethane, 25mm ID, 5mm THK	2

Pivot Arcs Service Kit for TSA-WTG

WTP-017

WorkTrack Guide

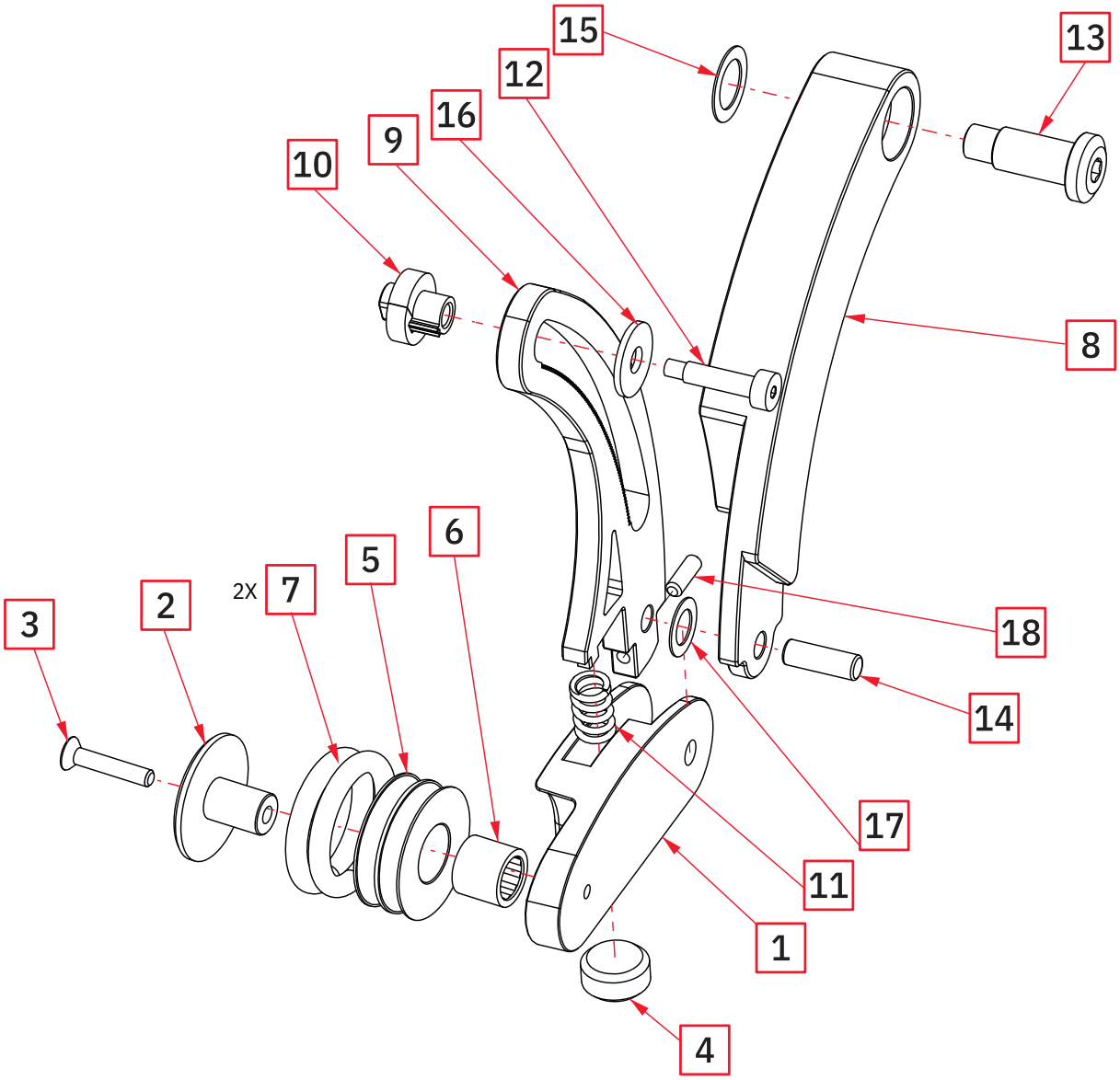

Pivot Arcs Service Kit for TSA-WTG (Cont.)

WTP-017

WorkTrack Guide

BILL OF MATERIALS		
ITEM NO.	**DESCRIPTION**	**QTY**
1	Roller Base, WorkTrack Guide	1
2	Wheel Holder, WorkTrack Guide	1
3	Bolt, M4x0.7, 22mm, Flat Head, Black Zinc	1
4	Set Screw, M16x2.0, 8mm, Black Zinc	1
5	Wheel Base, WorkTrack Guide	1
6	One-Way Locking Bearing Clutch, 10mm ID, 14mm OD, 12mm THK	1
7	O-Ring, Polyurethane, 25mm ID, 5mm THK	2
8	Pivot Arc, WorkTrack Guide	1
9	Ratchet Arc, WorkTrack Guide	1
10	Ratchet Catcher, WorkTrack Guide	1
11	Spring, Compression, Roller Base, WorkTrack Guide	1
12	Bolt, Shoulder, 5mm ODx18mm, M4x0.7, Socket Head, Silver Zinc	1
13	Bolt, Shoulder, 10mm ODx20mm, M8x1.25, Socket Head, Silver Zinc	1
14	Pin, Dowel, 6mmx18mm, 18-8 SS	1
15	Washer, 12mm ID, Flat, 18mm ODx0.5mm THK, Silver Zinc	1
16	Washer, M6, Flat, 18mm ODx1.6mm THK, Nylon	1
17	Washer, M8, Flat, 14mm ODx0.5mm THK, Silver Zinc	1
18	Set Screw, M4x0.7, 12mm, Socket Head, Silver Zinc	1

Fixed Arc Service Kit for TSA-WTG

WTP-018

WorkTrack Guide

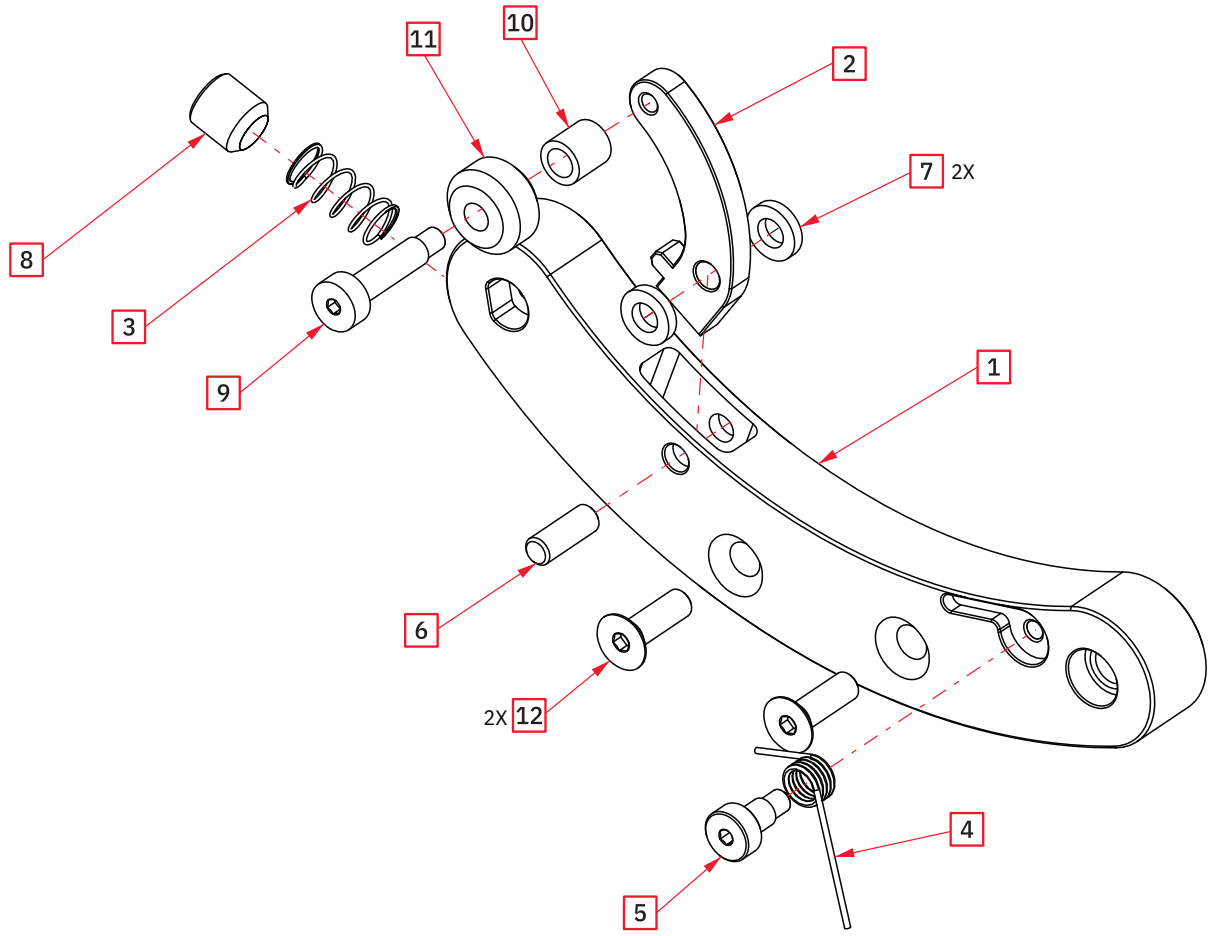

BILL OF MATERIALS		
ITEM NO.	**DESCRIPTION**	**QTY**
1	Fixed Arc, WorkTrack Guide	1
2	Roller Arc, WorkTrack Guide	1
3	Spring, Compression, Roller Arc, WorkTrack Guide	1
4	Spring, Torsion, Pivot Arc, WorkTrack Guide	1
5	Bolt, Shoulder, 5mm ODx6mm, M4x0.7, Socket head, Silver Zinc	1
6	Pin, Dowel, 5mmx14mm, 18-8 SS	1
7	Washer, M5, Flat, 10mm ODx2mm THK, Nylon	2
8	Set Screw, M10x1.0, 10mm, Black Zinc	1
9	Bolt, Shoulder, 5mm ODx18mm, M4x0.7, Socket Head, Silver Zinc	1
10	Spacer, M5, 8mm OD, 8.8mm	1
11	Pom Wheel, M5, 15mm OD, 9mm THK	1
12	Bolt, M5x0.8, 16mm, Countersink Head, Hex Drive, Silver Zinc	2

Arc Wheel Service Kit for TSA-WTG

WTP-019

WorkTrack Guide

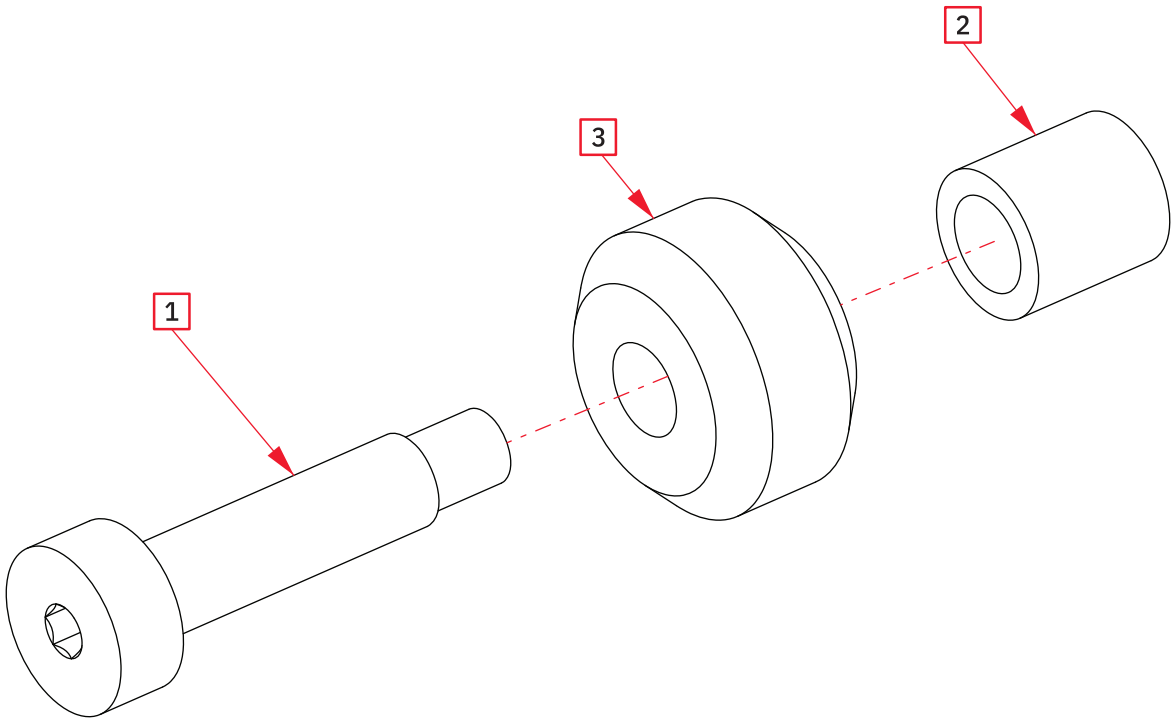

BILL OF MATERIALS		
ITEM NO.	**DESCRIPTION**	**QTY**
1	Bolt, shoulder, 5mm ODx18mm, M4x0.7, Socket Head, Silver Zinc	1
2	Spacer, M5, 8mm OD, 8.8mm	1
3	Pom Wheel, M5, 15mm OD, 9mm THK	1

Glide Strips Service Kit for TSA-WTG

WTP-020

WorkTrack Guide

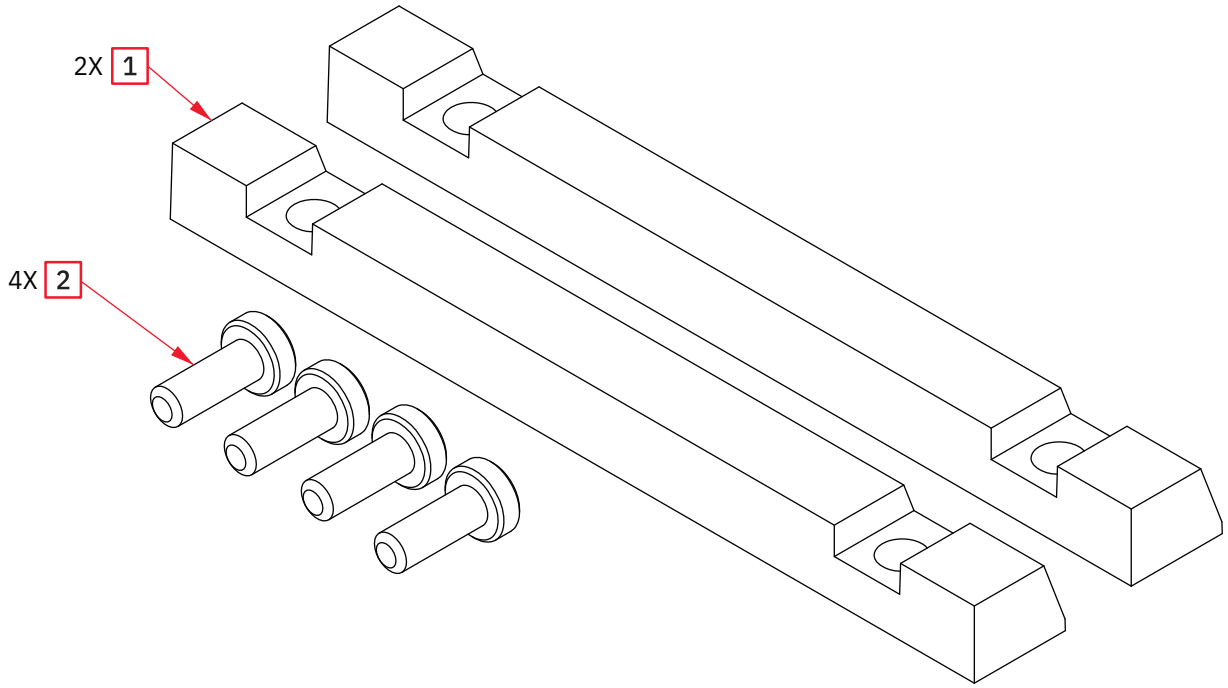

BILL OF MATERIALS		
ITEM NO.	**DESCRIPTION**	**QTY**
1	Glide Pads, Track Base, WorkTrack Guide	2
2	Bolt, M3x0.5, 8mm, Socket Head, Low Profile, Black Zinc	4

Springs Service Kit for TSA-WTG

WTP-021

WorkTrack Guide

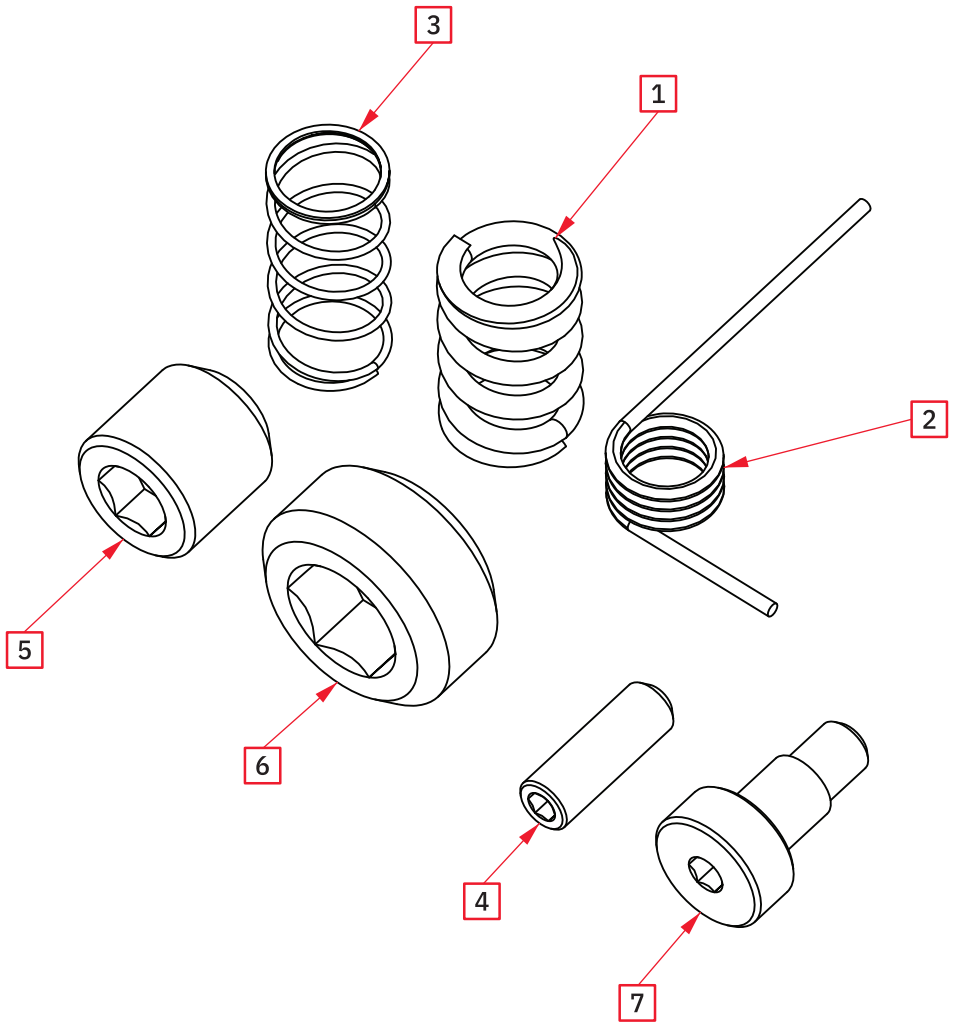

BILL OF MATERIALS		
ITEM NO.	**DESCRIPTION**	**QTY**
1	Spring, Compression, Roller Base, WorkTrack Guide	1
2	Spring, Torsion, Pivot Arc, WorkTrack Guide	1
3	Spring, Compression, Roller Arc, WorkTrack Guide	1
4	Set Screw, M4x0.7, 12mm, Socket Head, Silver Zinc	1
5	Set Screw, M10x1.0, 10mm, Black Zinc	1
6	Set Screw, M16x2.0, 8mm, Black Zinc	1
7	Bolt, Shoulder, 5mm ODx6mm, M4x0.7, Socket Head, Silver Zinc	1

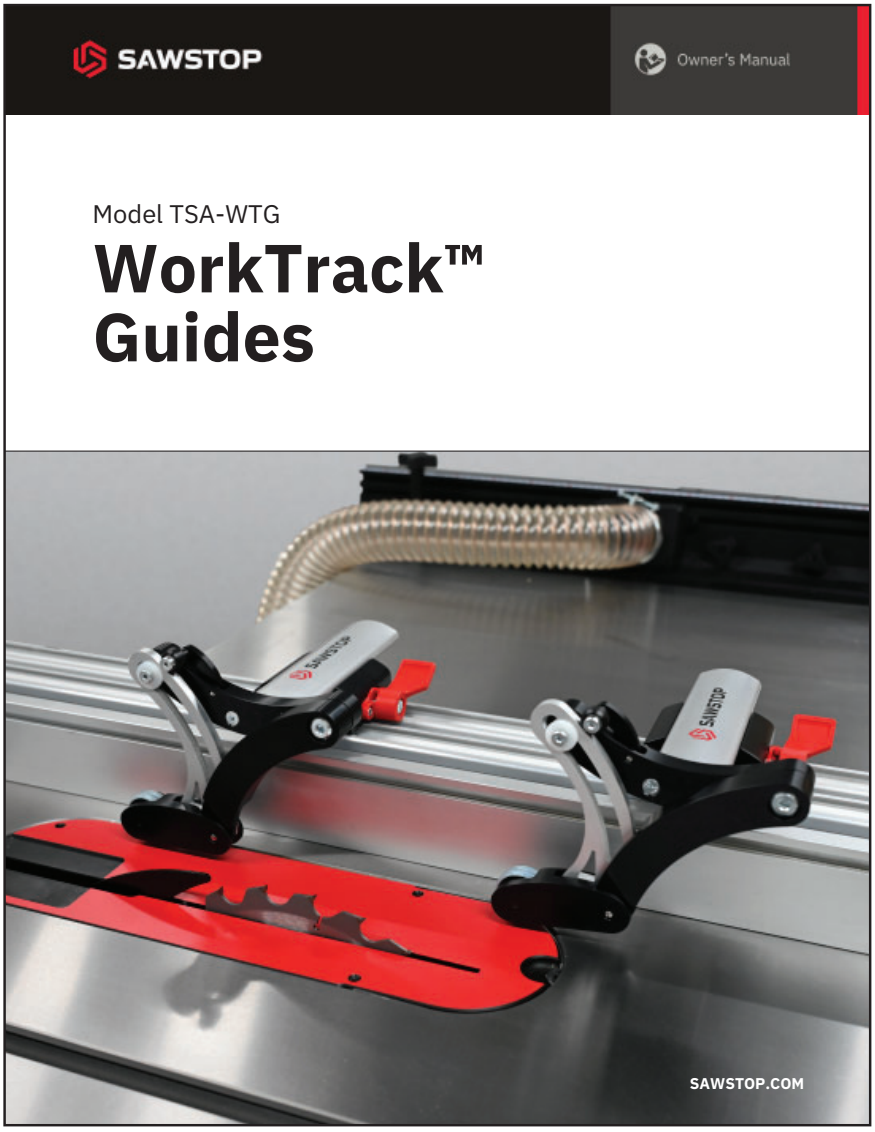

BILL OF MATERIALS		
ITEM NO.	**DESCRIPTION**	**QTY**
1	Owner's Manual, WorkTrack Guide	1

SAWSTOP

USA/Canada

SawStop
11555 SW Myslony Street
Tualatin, OR 97062 USA

SawStop.com/Support
TechnicalSupport@SawStop.com
503-582-9934

Parts available for purchase at
SawStop.com

Australia

Carbatec.com.au/contact
customercare@carbatec.com.au